Replacement - Spicer Fixed CV Joint | 2281-769

SPICER WITHOUT SECRETS: 100% Spicer technical content with 0% complications | How to replace the Fixed CV Joint 2281-769.

Written By: Spicer



INTRODUCTION

Replacing a Fixed CV Joint requires some care and specific tools.

TOOLS:

- Torquemeter (1)
- Pine Tree (1)
- Polyurethane Hammer (1)
- Screwdriver (1)
- Clamp Pliers - "Bridge" Type (1)
- Clamp Application Pliers (1)
- Inner ring pliers (1)
- Terminal Extractor (1)
- CV Joint Extractor (1)

PARTS:

- Fixed CV Joint 2281-769 (1)

© 2025

Step 1 — Half Shaft Removal

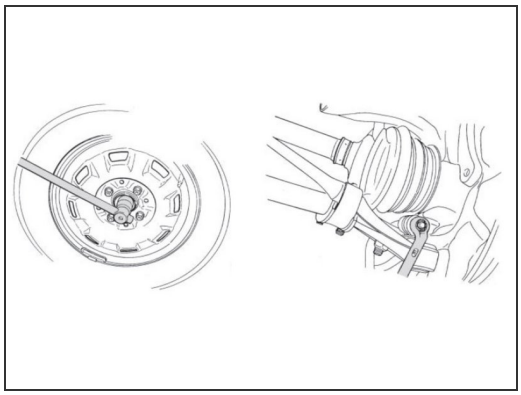

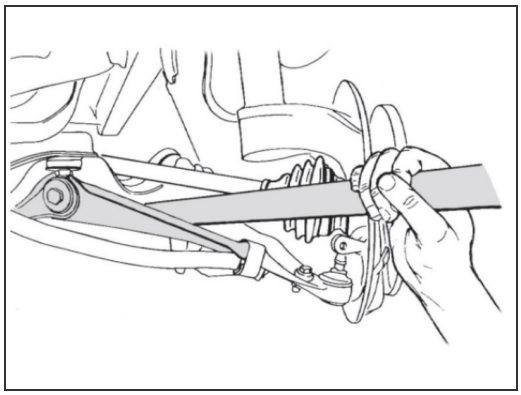

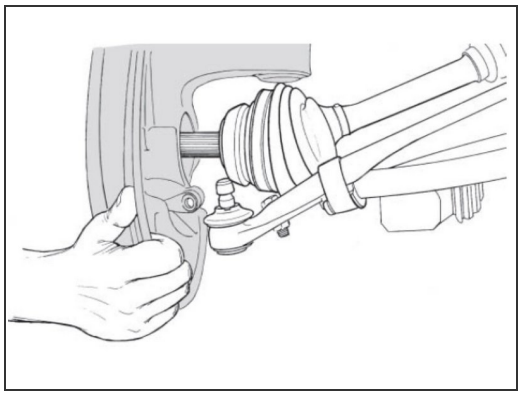

- With the vehicle resting on the ground, remove the cotter pin, loosen the axle shaft nut and the wheel bolts; With the vehicle suspended, remove the wheel;
- Loosen the pivot and tie rod end nuts; Using an extractor, remove the pivot and tie rod end;
- Using a lever, force the tray down to disengage the pivot;
- Pull the axle sleeve to release the Fixed Joint, if necessary, use a polyurethane hammer;

Step 2 — Disassembly of the Fixed Joint

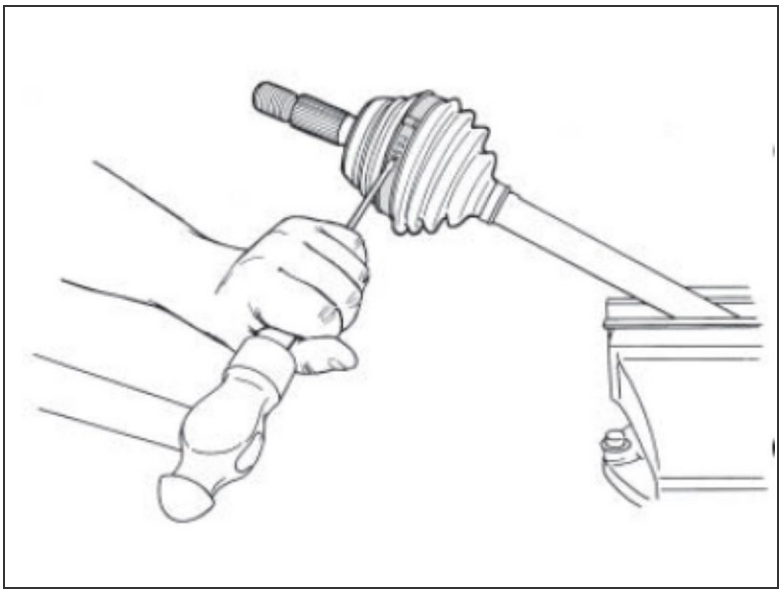

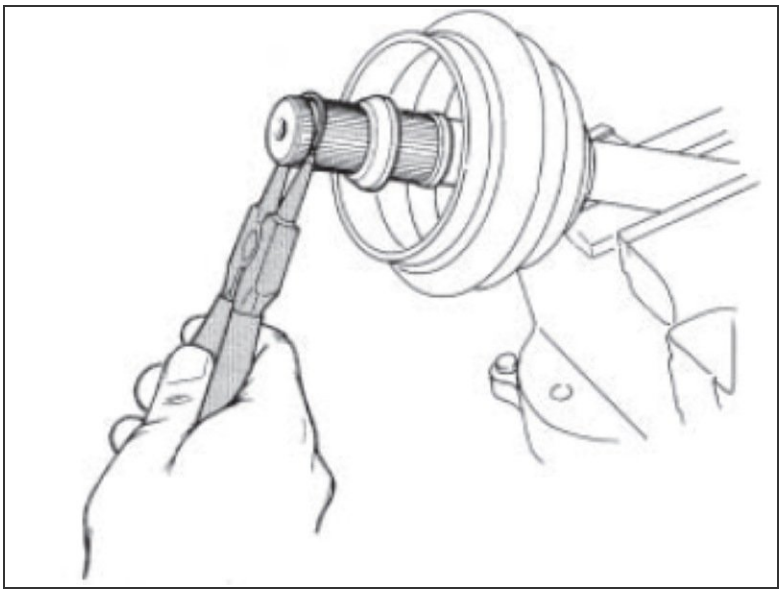

- Remove the clamps and move the hood away from the Fixed Joint;
- Using ring pliers, open the lock and remove the Fixed Joint from the shaft;
- Remove the Fixed Gasket and the Hood;
- Clean the half shaft to avoid grease contamination.

© 2025

Step 3 — Fixed Joint Assembly

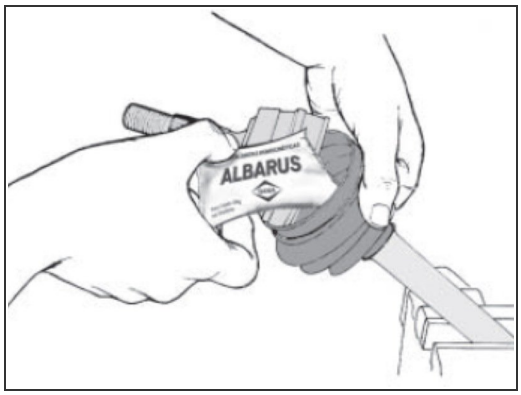

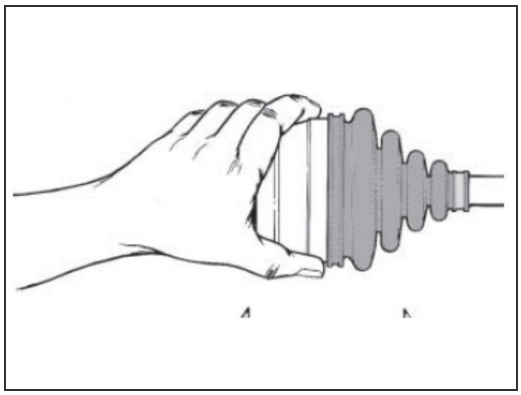

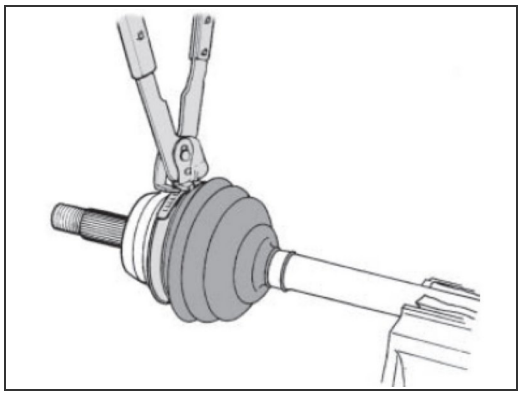

- Manually assemble the Hood;
- Apply grease to the joint, starting at the bottom (using the nozzle of the tube) and fill the entire cavity, moving the cage to facilitate the process;
- Position the spline of the Fixed Joint, on the spline of the Semi-shaft, use a polyurethane hammer and hit the end of the Joint, until the lock ring fits into the groove of the Joint; Check that the Joint is firm on the shaft, pulling on the body;
- Apply the remaining grease to the hood;
- Secure the larger clamp with the help of special pliers; Before securing the smaller clamp, use a round-tipped wrench between the boot and the shaft to allow some air to enter. Secure the smaller clamp, positioning it in the recess of the shaft.

© 2025

Step 4 — Half-shaft Installation

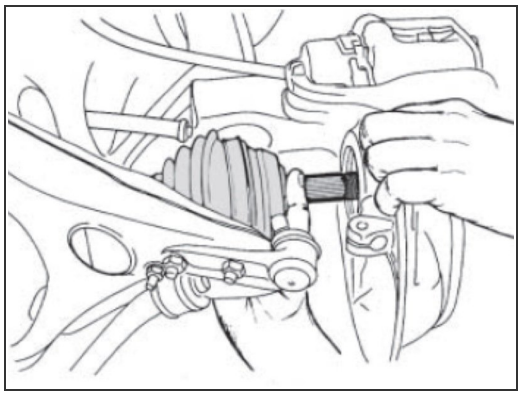
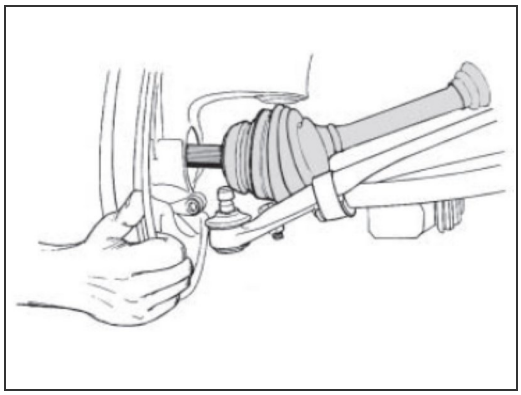
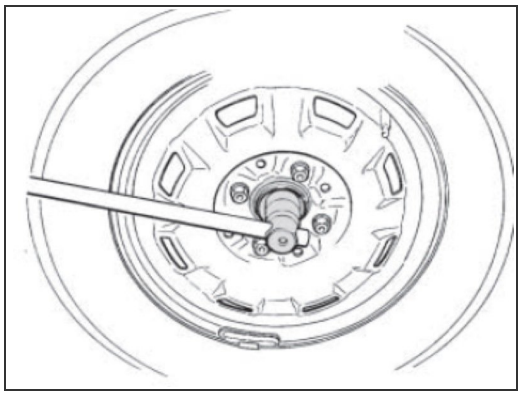

- Place the end of the Fixed Joint on the Hub. Fit the axle sleeve onto the Pivot. Install the steering terminal;
- Tighten the Pivot and Tie Rod End nuts.
- Place the new half-shaft castle nut, **do not reuse the nut or the old cotter pin.** Position the Wheel and wheel bolts.
- **Apply 280 Nm of torque to the axle shaft nut;**
- Place the cotter pin in the housing and crimp the ends according to the castle nut fitting.

Step 5 — Safety is the result of the work of all of us.



- Under no circumstances should you attempt any repair or maintenance for which you are not trained or if you do not have the tools and equipment to perform the repair.
- Always wear proper safety glasses when performing any type of maintenance. Failure to wear safety glasses may result in injury and/or partial or complete loss of vision.
- Always be careful when working with products that have sharp edges.

Step 6 — Respect the Environment



- An important part of your workshop's work and operation is the correct disposal of products that will be replaced. Do your part and together we can contribute to a sustainable future.
- Find out more at http://www.spicer.com.br/danatureza

Avoid damage and premature wear, after installing the Half-shaft, check the vehicle's geometry.