Bear Lab

2. X axis

Written By: Grégoire Saunier

This document was generated on 2026-10-22 02:37:33 PM (MST).

Step 1 — X Ends Parts

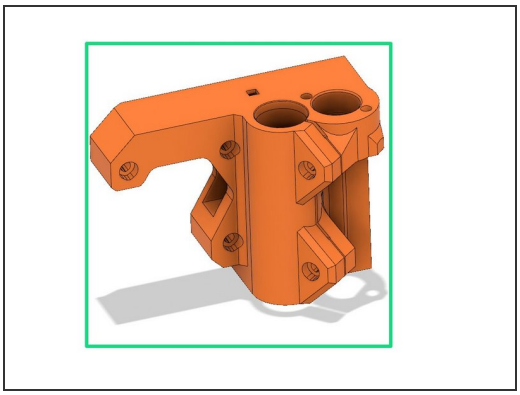

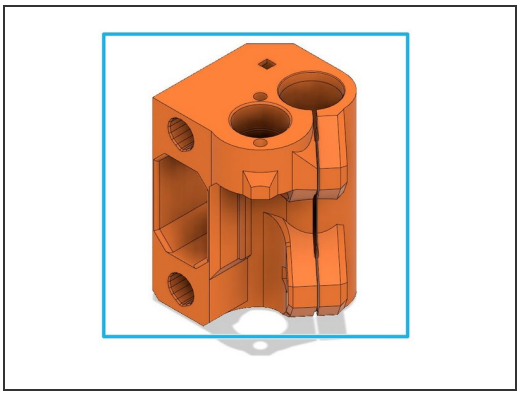

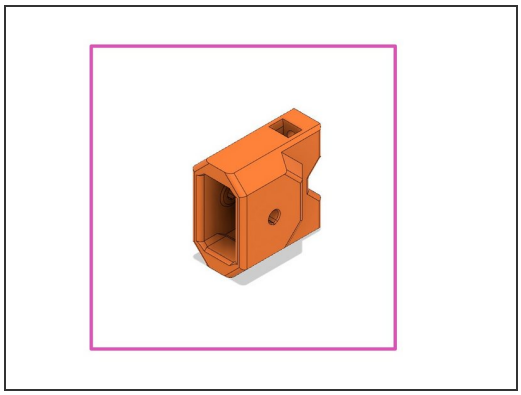

- *x_end_motor*
- *x_end_idler*
- *x_end_idler_idler_mount*

Step 2 — X End Idler

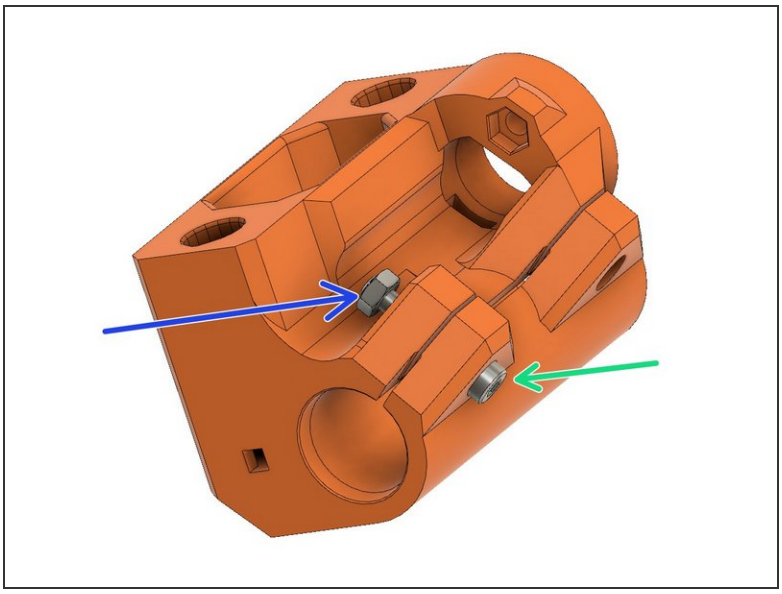

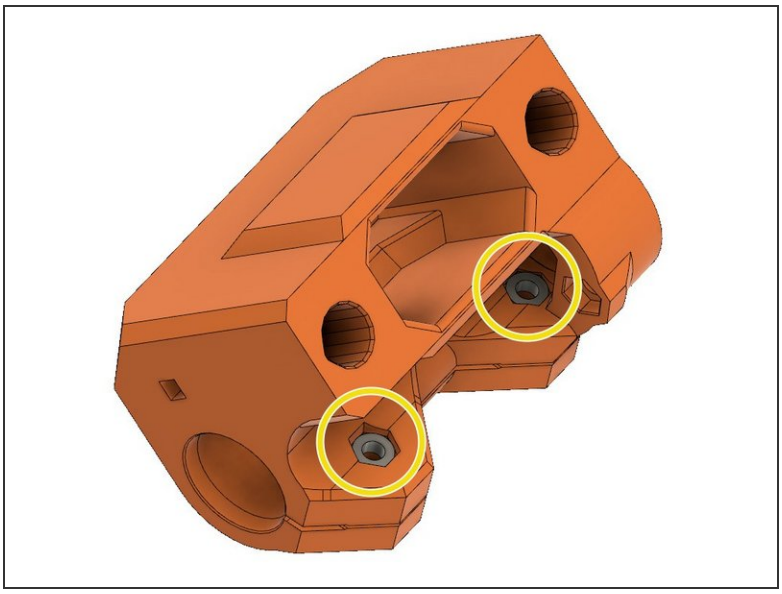

- Insert an M3x18mm socket head screw in one of the *x_end_idler* clamp holes. This screw helps insert the hex nut.
- Using tweezers, hold an M3 hex nut so that it can be threaded onto the M3x18mm socket head screw. Tighten that screw until the M3 hex nut is firmly seated.
- Remove the M3x18 socket head screw and repeat on the other clamp hole.

Step 3 — X End Idler

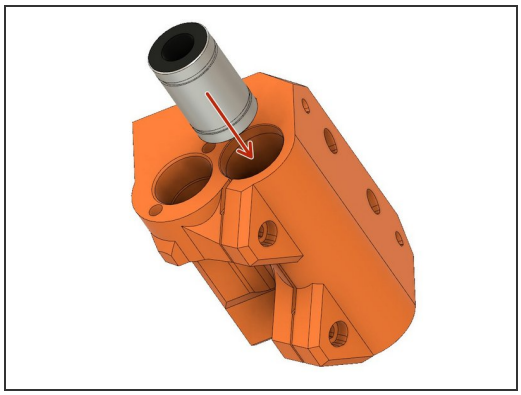
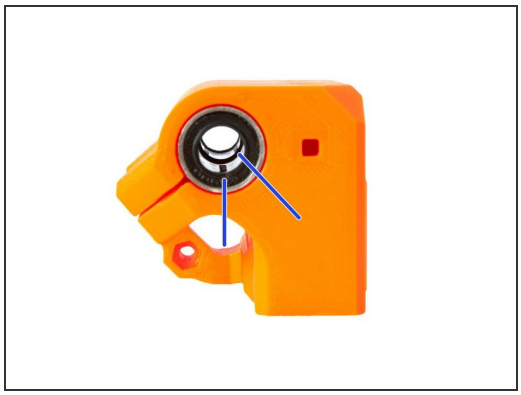
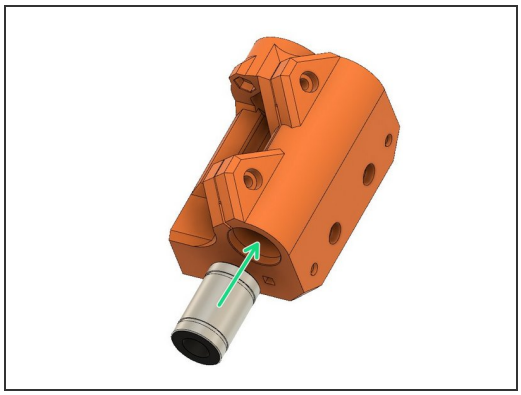

- Insert an LM8UU linear bearing into *x_end_idler* until it hits the internal stop.
- The next LM8UU linear bearing will have to be inserted so that the rows of balls are at 45° compared the rows in the other bearing.
- Insert that LM8UU linear bearing until it hits the internal stop.

⚠ Verify that row of balls are rotated by 45° from each other

Step 4 — X End Idler

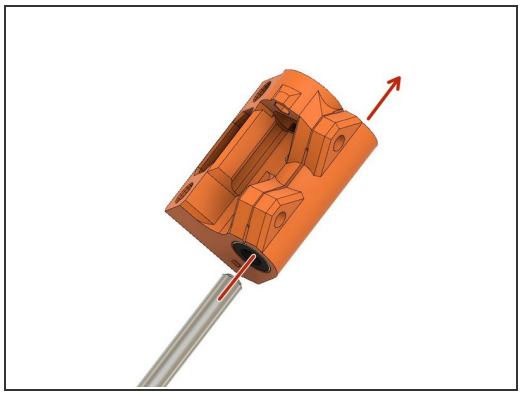
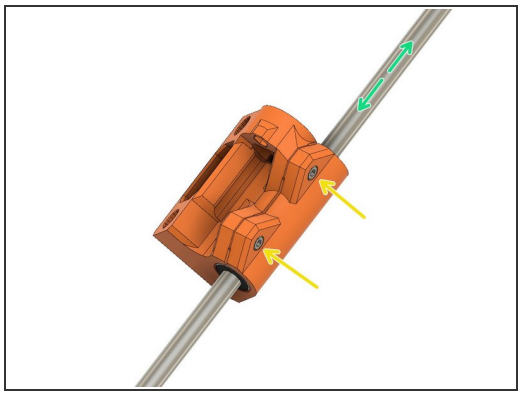
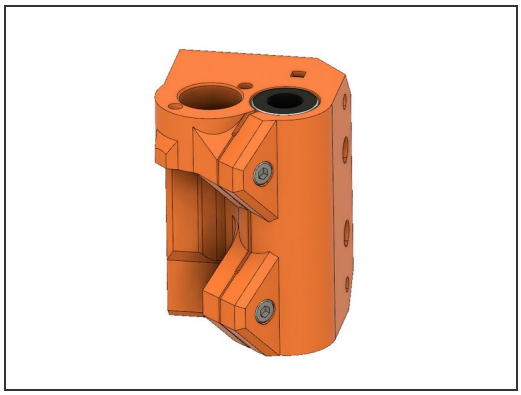

- Temporarily insert a 8mm smooth rod through both LM8UU linear bearings.
- Engage two M3x10 socket head screws in the hex nuts, but do not tighten them at this time.
- Alternatively tighten the two M3x10 clamp screws to secure the linear bearings. Slide the smooth rods back and forth while tightening.

⚠ Don't over-tighten the clamp screws; they need to be just tight enough to keep the bearings from moving.

- Remove the 8mm smooth rod.

Step 5 — X End Motor

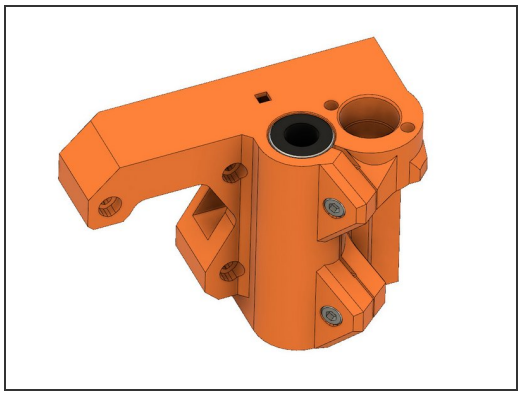
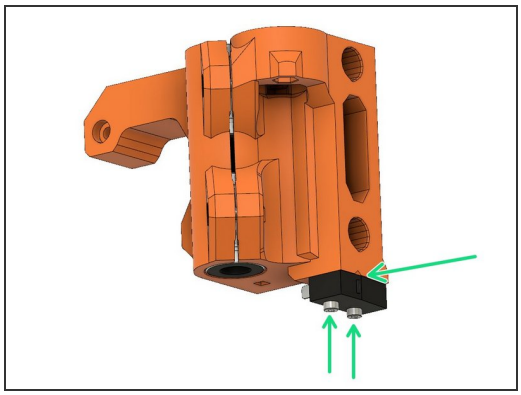
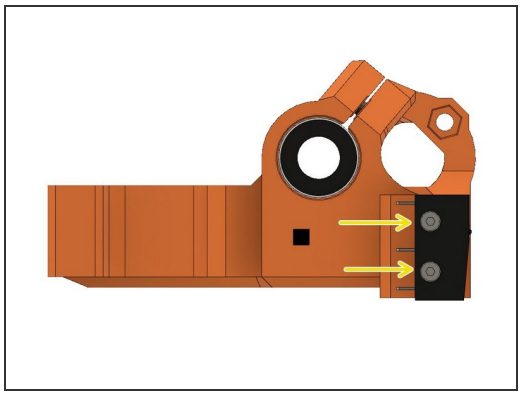

- Repeat the 3 previous steps on *x_end_motor*
- **MK2s and MK2.5 only:** Use two M2x12 screws to attach the x-endstop switch. Ensure the correct orientation of the switch.
- **MK2s and MK2.5 only:** While tightening the screws, apply gentle pressure in the direction shown.

⚠ **MK2s and MK2.5 only:** Do not to over-tighten the M2x12 screws!

⚠ **MK2s and MK2.5 only:** Double check x-endstop switch orientation

Step 6 — X Smooth Rods

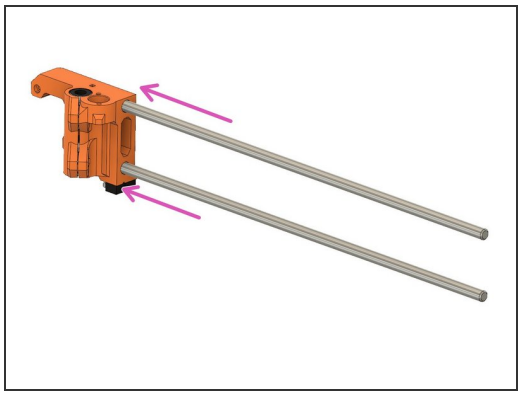
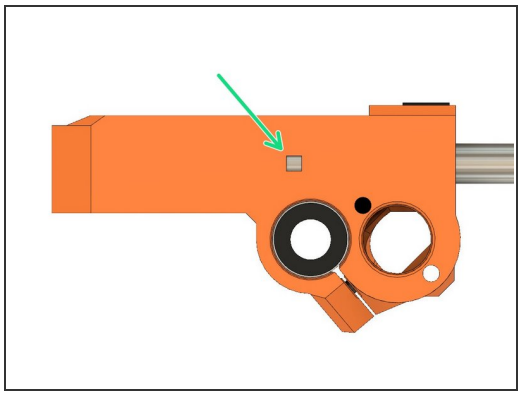
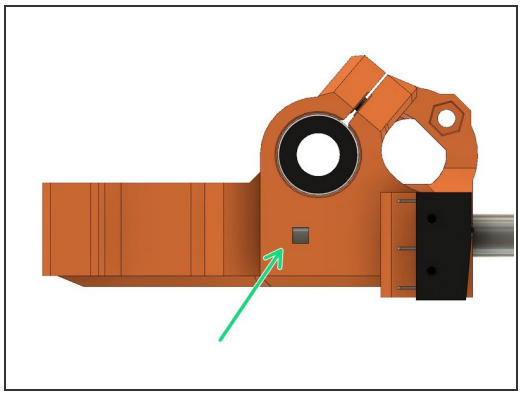

- Check the x_end_motor holes for the smooth rods to ensure they are clean
- Slide the two 370mm smooth rods in the *x_end_motor*.
- Ensure that the smooth rods are fully inserted. You can see them in the little windows on top and bottom.

Step 7 — X Smooth Rods Assembly

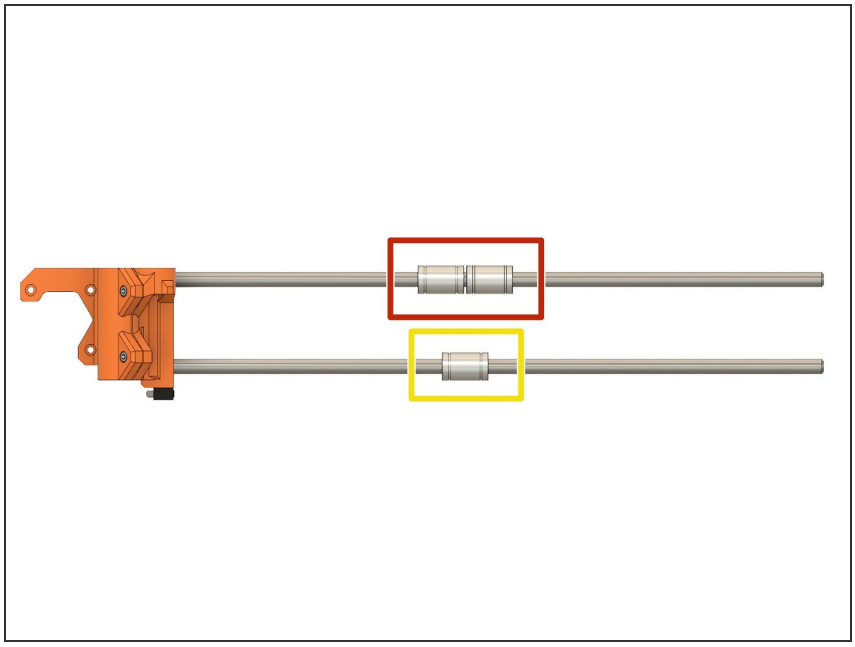

- Insert two LM8UU linear bearings on the top smooth rod.
- Insert one LM8UU linear bearing on the bottom smooth rod

⚠ Be very careful inserting the LM8UU linear bearings.

Step 8 — X Smooth Rods Assembly

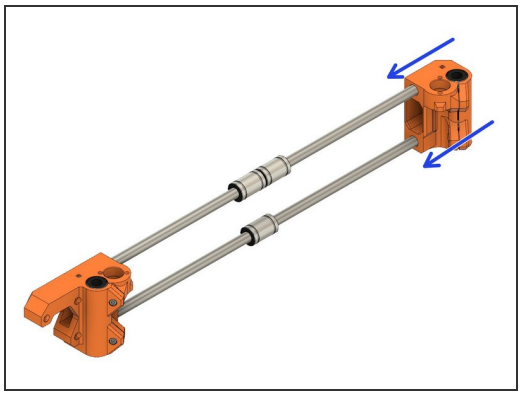
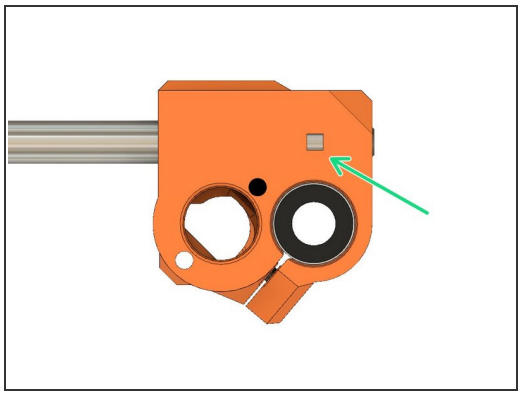
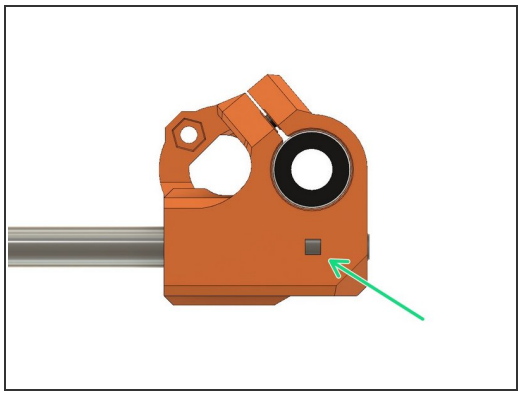

- Insert both rods simultaneously into the *x_end_idler* and provide even pressure to force the rods all the way in.
- Using the observation windows, verify that each rod is fully seated.

⚠ Take the time to double check observation windows on both *x_end_idler* and *x_end_motor*.

Step 9 — X End Motor

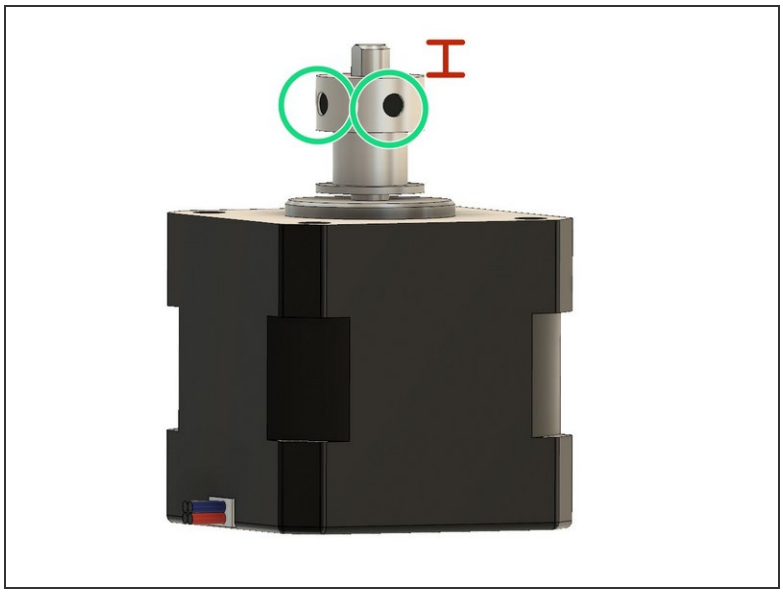

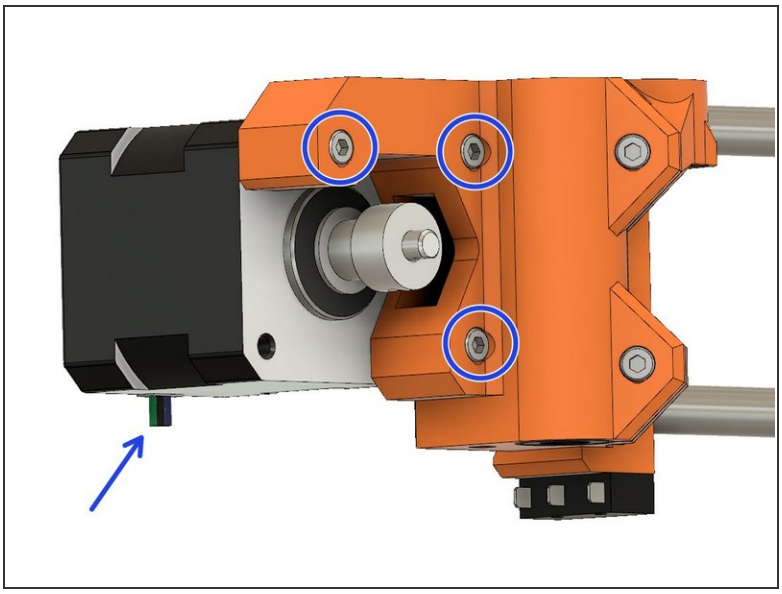

ⓘ The 2GT 16T pulley grooves are not visible on the images

- Position the 2GT 16T pulley so that approximately 3.5 to 4 mm of the shaft protrudes. Ensure the pulley is not touching the motor.
- Align one of the set screws on the motor shaft flat and then tighten alternatively both set screws until they are both snug.
- Using three M3x18 screws, attach the x-axis motor. Note the orientation of the wires.

⚠ Double check the pulley position and ensure it does not touch the motor

Step 10 — X End Idler Idler Mount

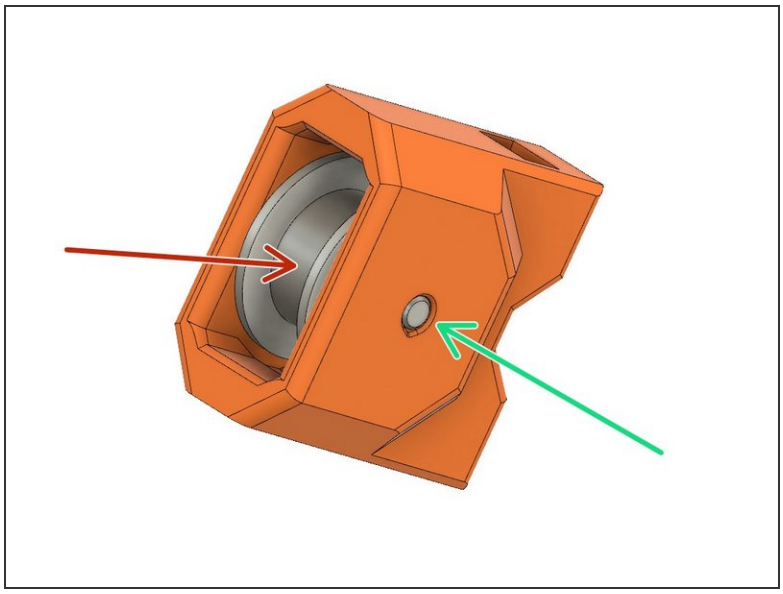

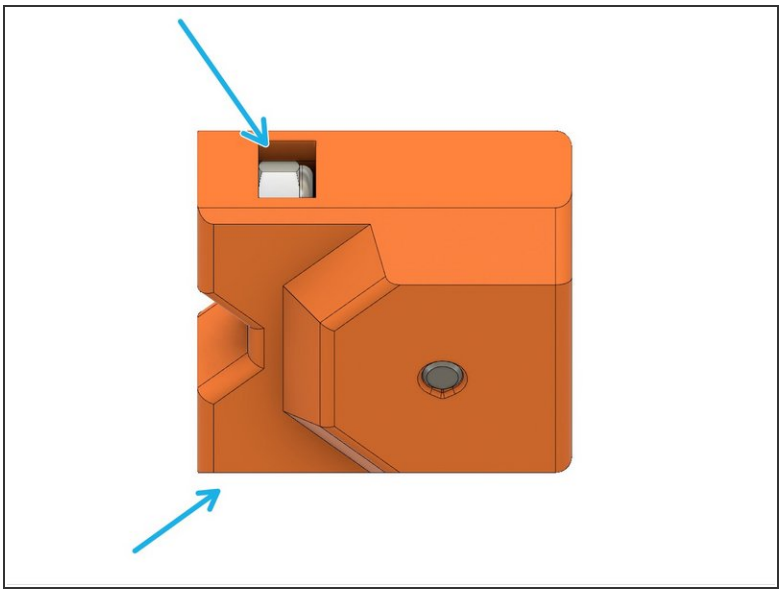

- Insert the idler in the *x_end_idler_idler_mount*.
- Press the dowel pin through the *x_end_idler_idler_mount* and idler bearings.
- ⚠ Verify that the dowel is not protruding from either side.
- ⚠ Verify that the idler spins freely.
- Insert two M3 nylock nuts in the top and bottom of *x_end_idler_idler_mount*. Note the orientation of the nylock nuts.

Step 11 — X End Idler Idler Mount

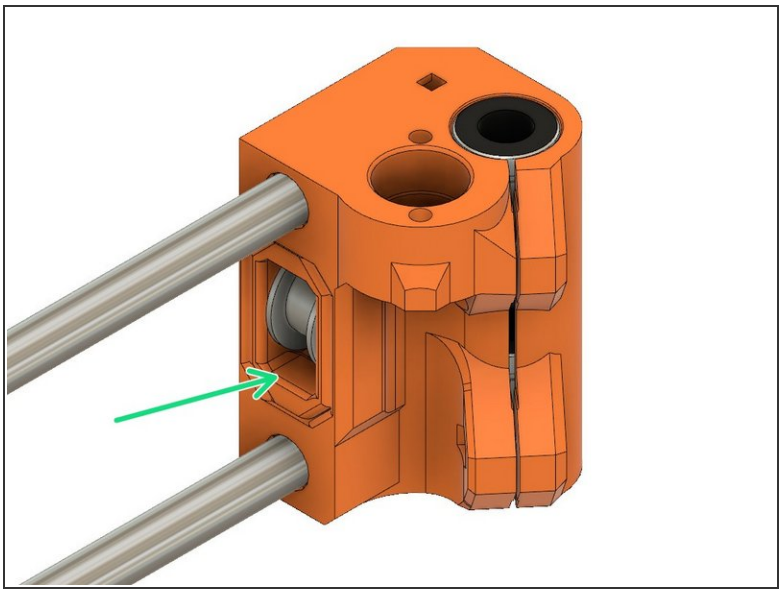

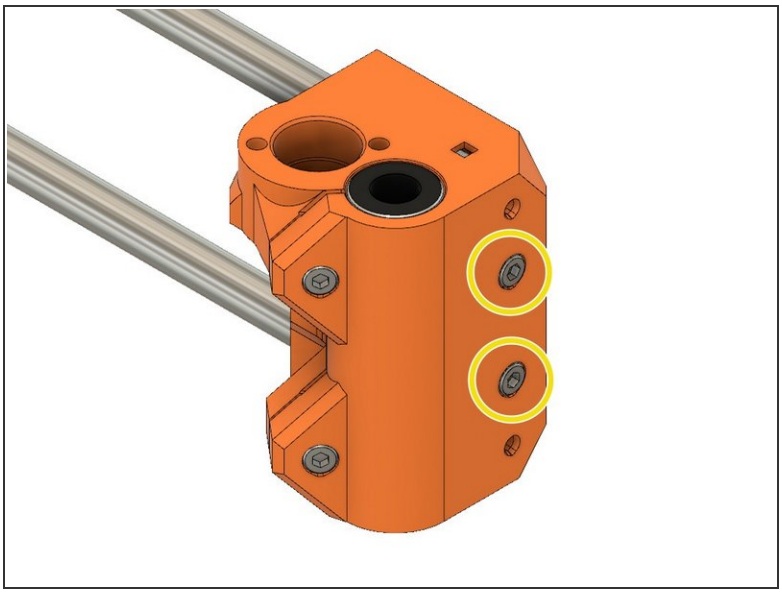

- Insert the *x_end_idler_idler_mount* in the *x_end_idler*.
- Secure it with two M3x18 screws. Don't tighten the screws, only engage them.

Step 12 — Trapezoidal Nuts

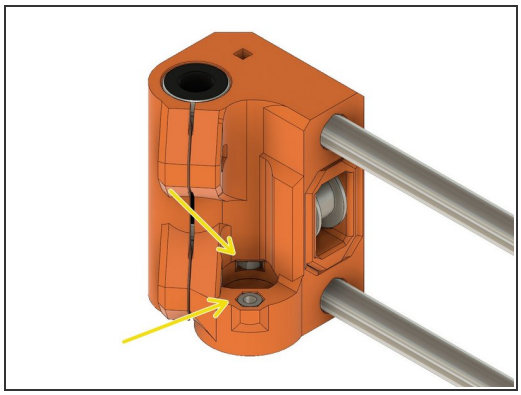
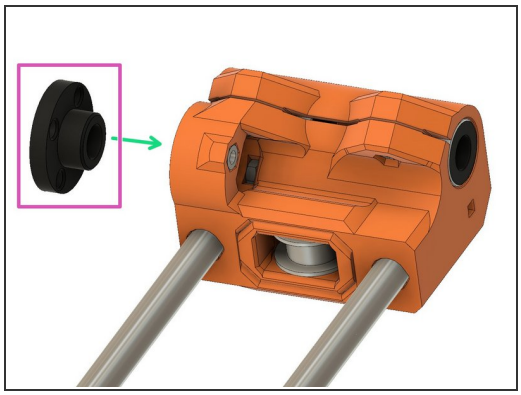
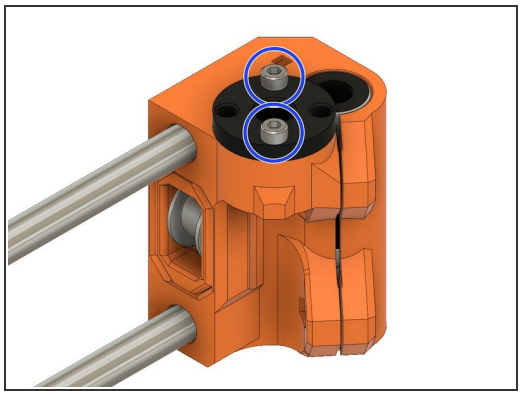

- Insert two M3 hex nuts in the dedicated pockets *of x_end_idler*.
- Note the orientation of the trapezoidal nut.
- Insert a trapezoidal nut on top of *x_end_idler*.
- Using two M3x18 screws, tighten the trapezoidal nut. Don't over-tighten the screws. They will be loosened and re-tightened after the x-end has been mounted on the z-axis rods.

⚠ Verify trapezoidal orientation.

Step 13 — Trapezoidal Nuts

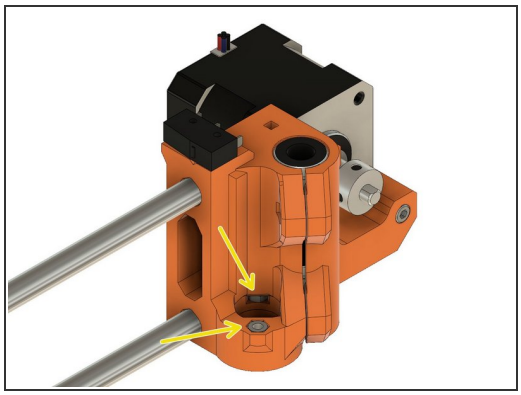
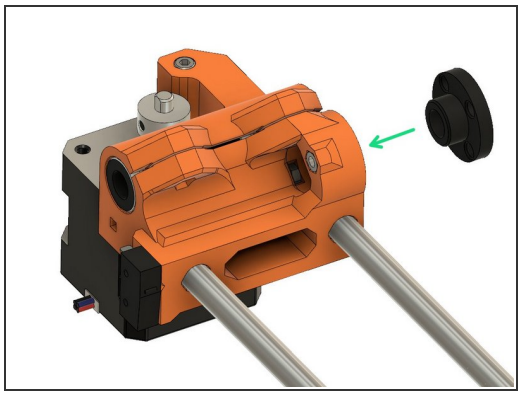
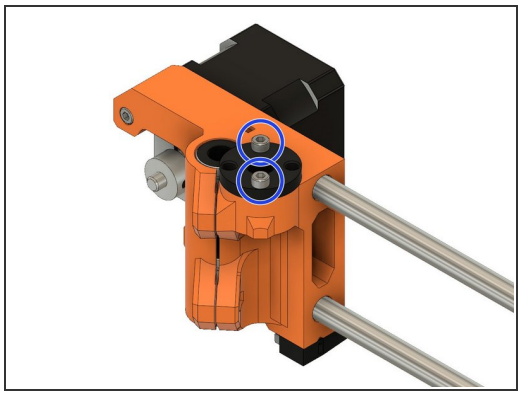

- Insert two M3 hex nuts in the dedicated pockets of *x_end_motor*.
- Insert a trapezoidal nut on top of *x_end_motor*.
- Using two M3x18 screws, tighten the trapezoidal nut. Don't over-tighten the screws.

⚠ Verify trapezoidal orientation.

Step 14 — Assembling X Axis On Z Axis

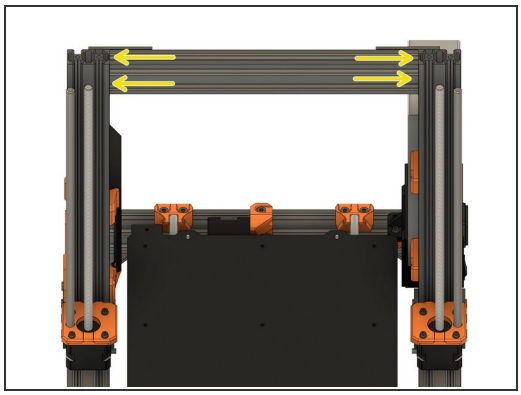
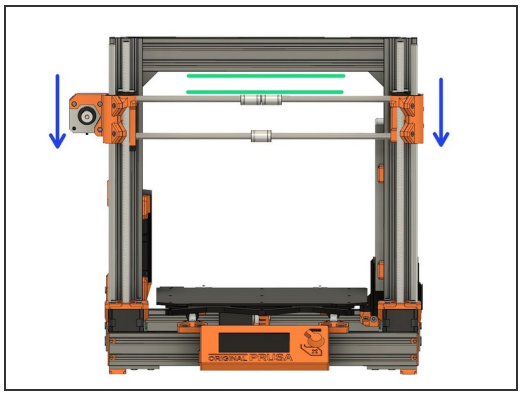
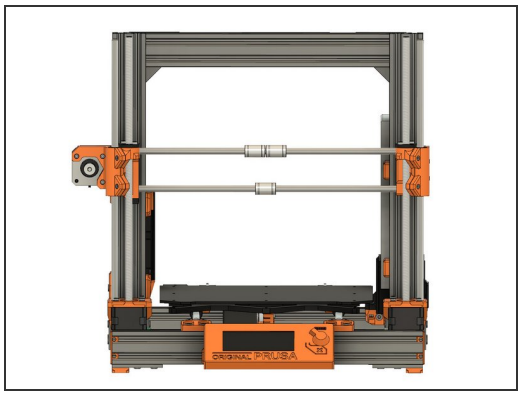

- Check that *z_tops* and "z_end_caps" have been removed.
- Carefully slide the X axis assembly onto the Z-axis. Rotate the lead screws to engage the X axis in the trapezoidal nuts.
- Continue to rotate the lead screws with your fingers to move down the X axis assembly by few centimeters. If the X end is not parallel with the horizontal v-v-slot at the top of the Z axis, rotate one side to make the X axis assembly parallel to top of Z axis.
- Continue to move the X axis assembly down to the middle of the Z axis. Keep the X axis as flat as possible

Step 15 — Assembling X Axis On Z Axis

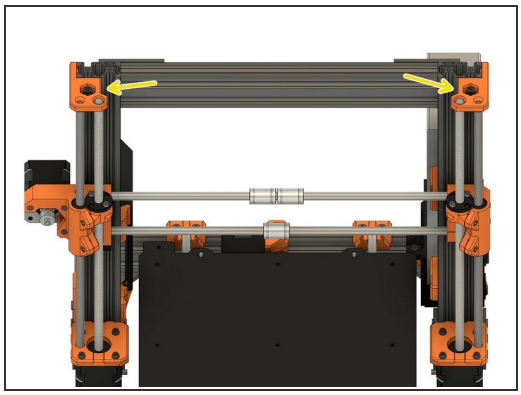
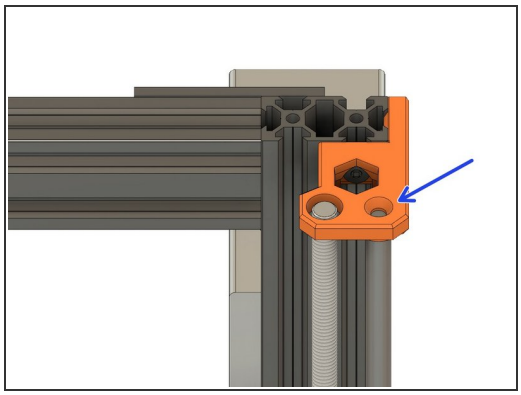
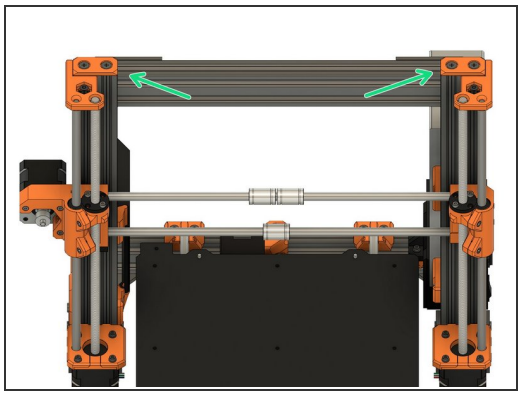

- Install the *z_tops* with the two M5x10 screws and tighten them snug.
- Make sure the *z_tops* are flush with Z smooth rods on both sides
- Tighten the *z_ends_caps* on top of Z axis with the M5 screws.

Step 16 — Next chapter

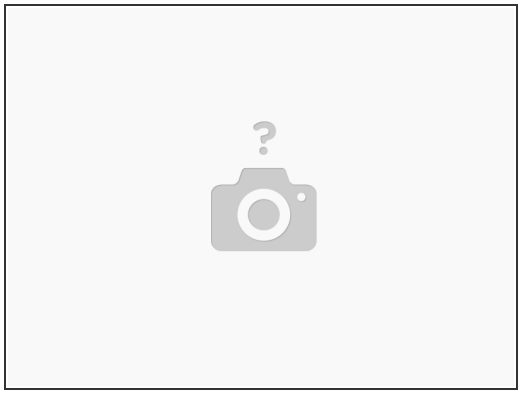

- Congratulations you have finished this chapter :-)
- Go to the next chapter: [3. Extruder]

To reassemble your device, follow these instructions in reverse order.