G2 Projection/Offset Mount Bracket Installation

To Install Header Projection Mount Bracketry for a G2 Door X096

Written By: Todd Lucas

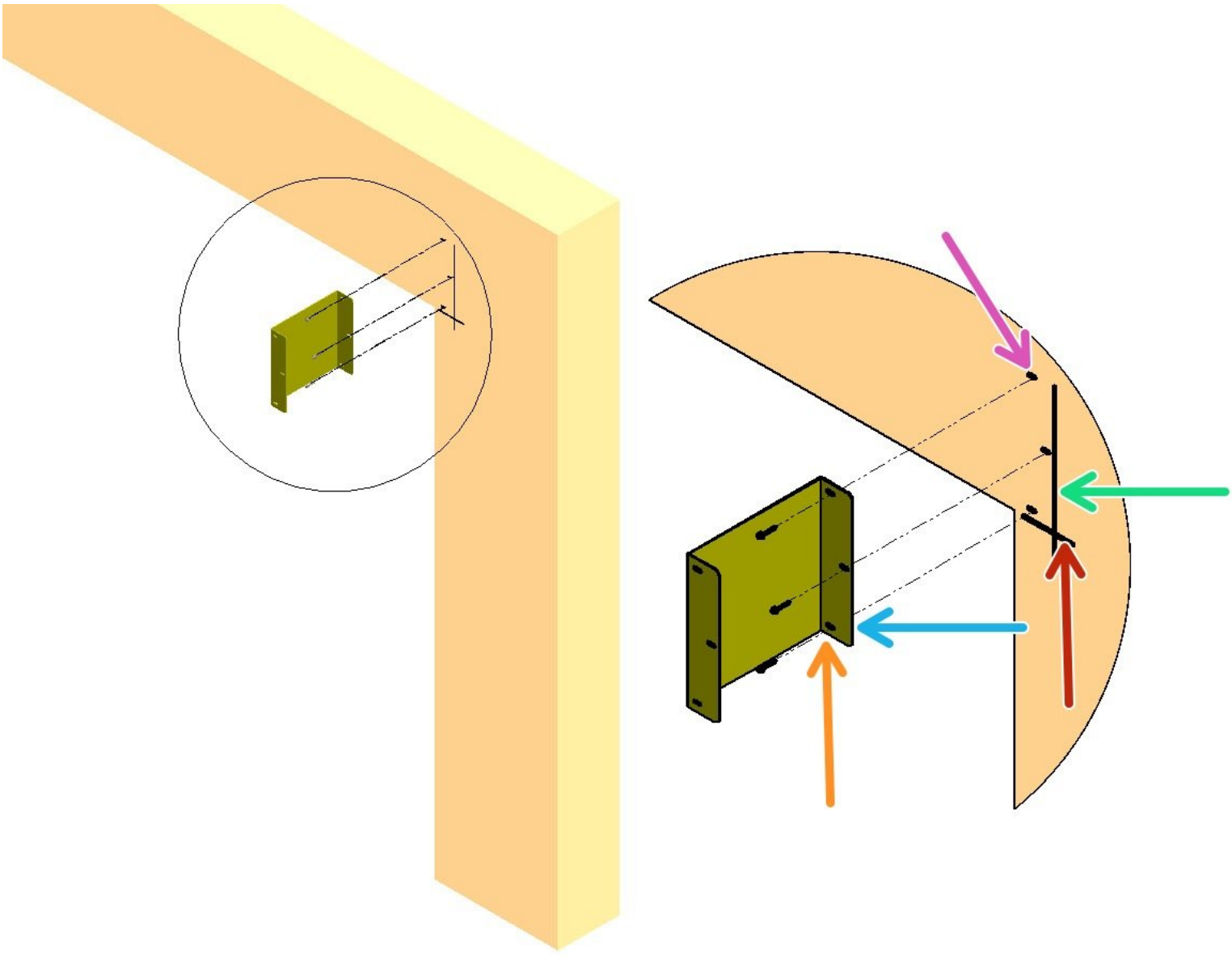

Step 1 — Orient Projection Brackets

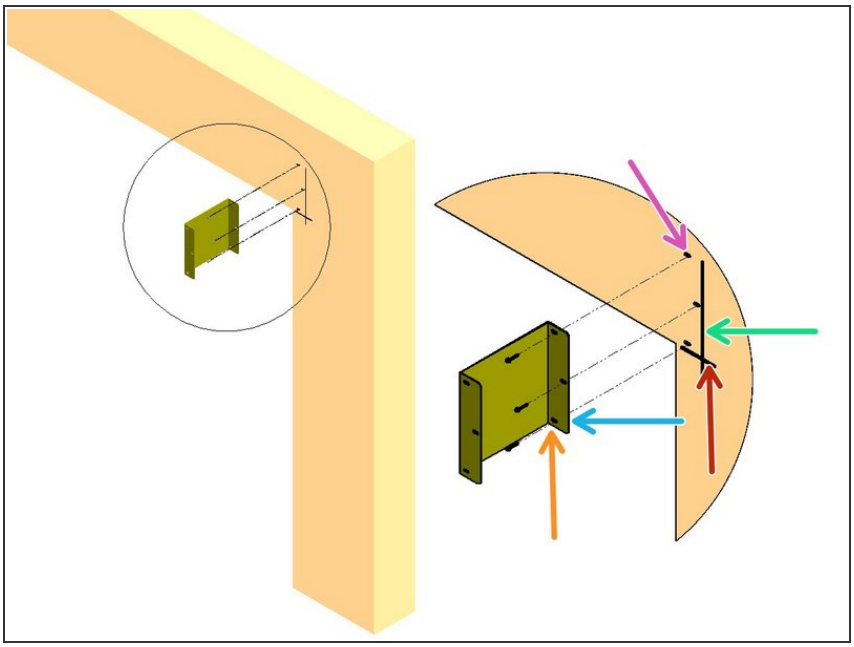

- Orient the slotted end of the Header Mounting Projection Bracket against the Mounting Surface.
- Orient the flange outward.
- Align the Bottom surface of the Header Mounting Bracket with the Horizontal line on the Mounting Surface.
- Align the Outer edge of the Header Mounting Bracket with the Vertical line on the Mounting Surface.
- Trace the slotted mounting slots onto the Mounting Surface.

Step 2 — Fasten Projection Brackets

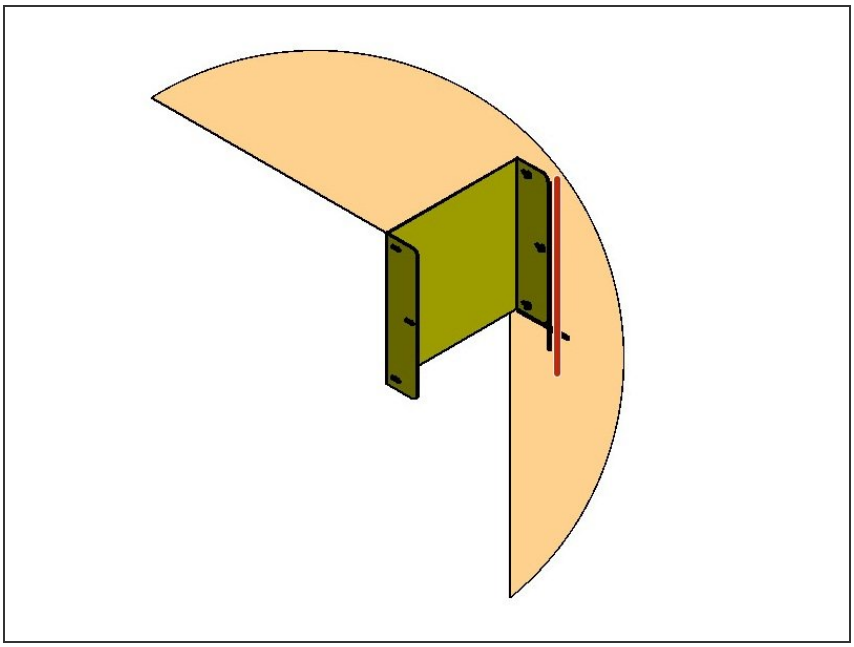

- Loosely fasten Bracket to the Mounting Surface with appropriate hardware.
- Plumb the Bracket.
- Tighten Hardware securely.
- Repeat for the other Header Mounting Bracket.

© 2026