Mount G1 STD Projection Mounted Roll Header Assembly

Written By: Trent Borgardt

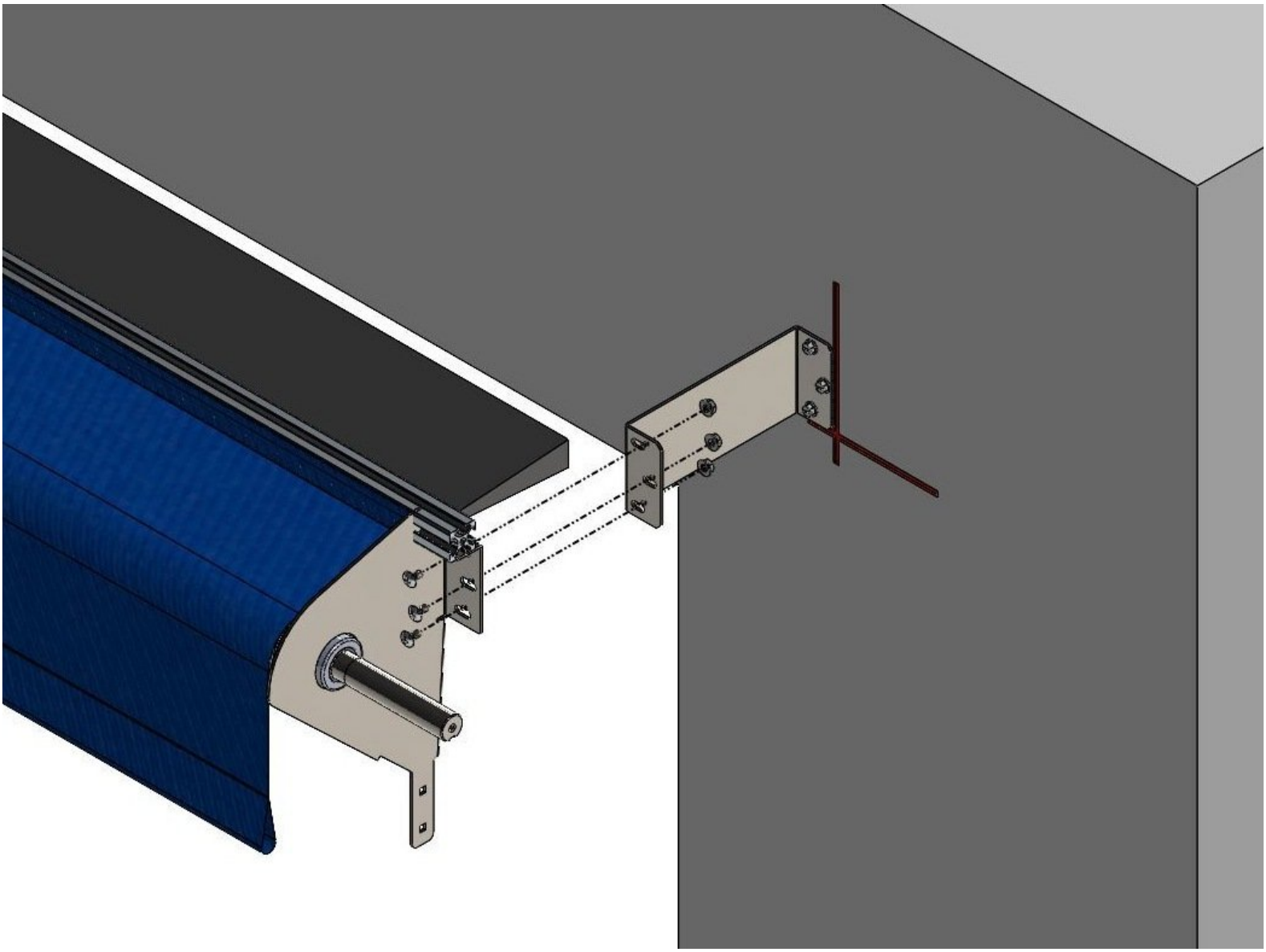

Step 1 — Mount G1 STD Projection Mounted Roll Header Assembly

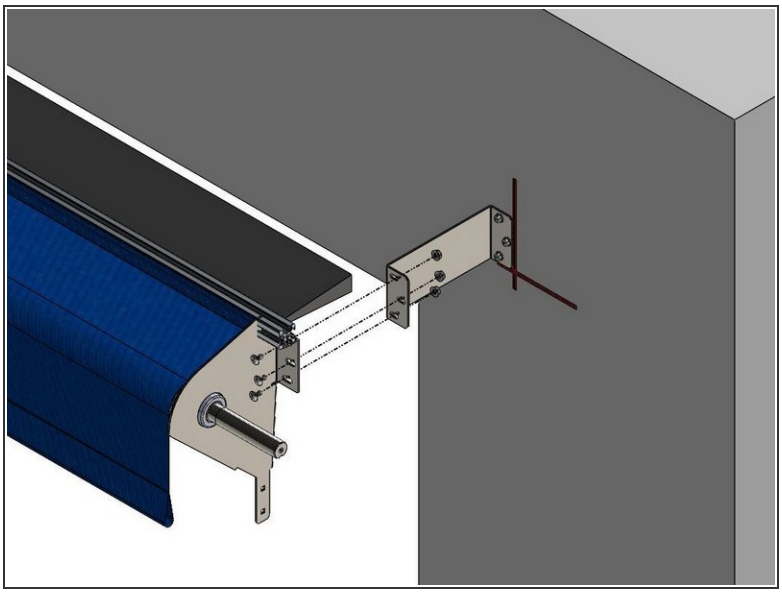

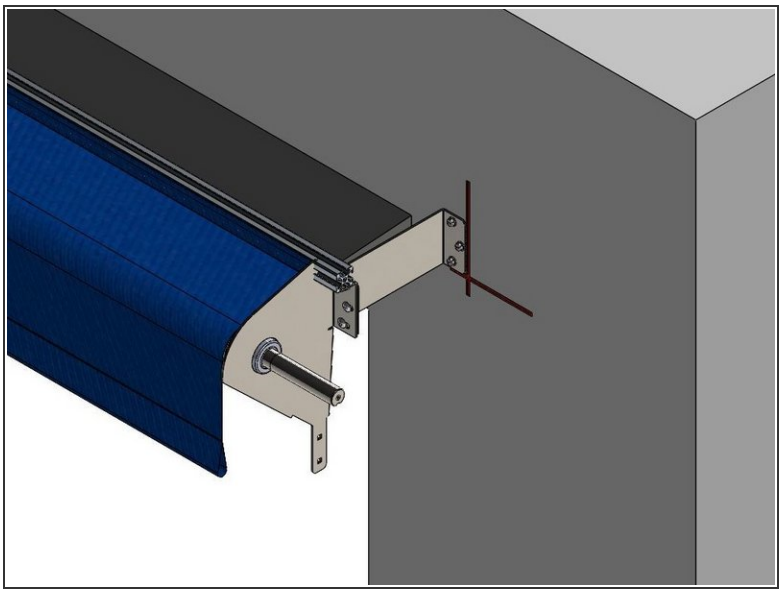

⚠ Use two (2) people, and two (2) Ladders at minimum to Install the Roll Header Assembly

- Raise the Roll Header Assembly into place on the Projection Brackets.
- Loosely Tighten with three (3) sets of ¼-20 Screws, Flat Washers and Hex Nuts per side.

⚠ Do not fully tighten the Hardware until the Header Assembly Brackets are Aligned and Plumb with the Projection Brackets.

- Check the Header Assembly for Level, and make any necessary final Adjustments.
- Once aligned, fully Tighten all six sets of Hardware.
- At this point leave the Roll/Web Assembly tied off and held in place as it comes.