G1 Premium 1200 In-Tube Motor In-Jamb Mount

G1XL Premium Plus 1200 In-Tube intube in tube motor In-Jamb in jamb injamb 123475

Written By: Todd Lucas

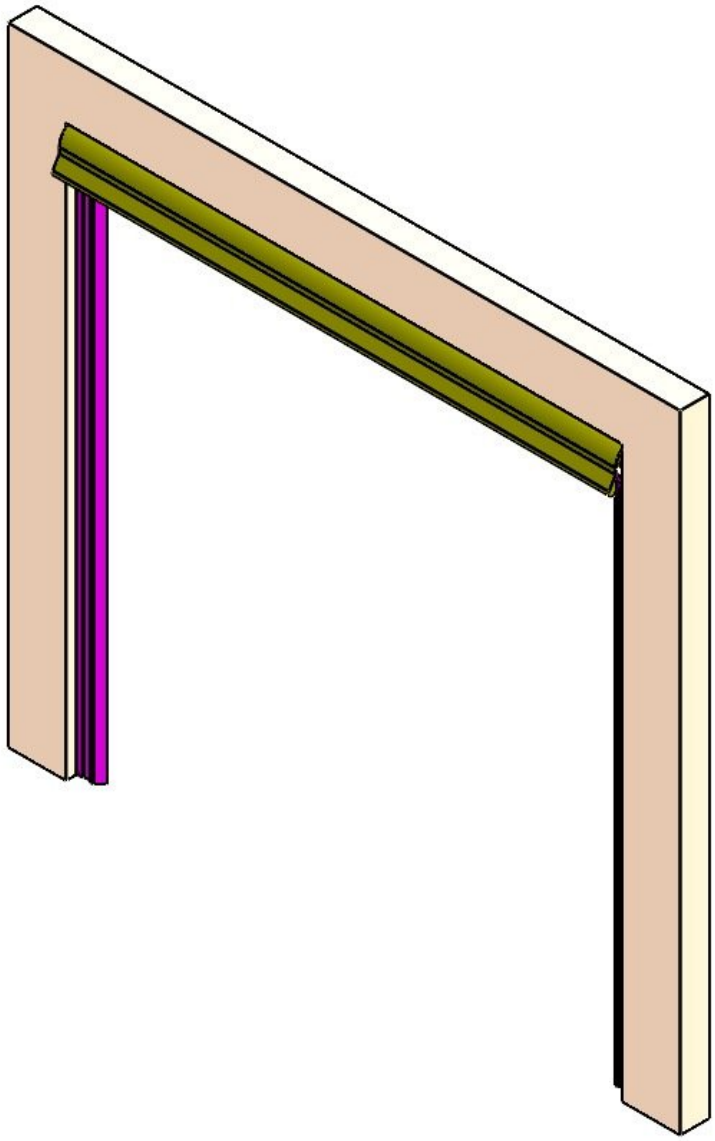

Step 1 — Review Product and Warnings

ATTENTION

Thank you for purchasing from Goff's Enterprises, Inc. To ensure maximum functionality and longevity of your product, please carefully review and understand this guide.

SAFETY WARNING

READ THIS MANUAL CAREFULLY. MOST INSTALLATION REQUIRES A LADDER AND TWO PEOPLE AT A MINIMUM. WEAR PROPER SAFETY GEAR AND CLOTHING. OBSERVE WARNINGS AND PRACTICE CAUTION WHEN INSTALLING, OPERATING, OR MAINTAING YOUR PRODUCT. FAILURE TO DO SO COULD RESULT IN SERIOUS INJURY.

ADDITIONAL SUPPORT

For additional assistance after reviewing this instruction, please reach out to our Technical Support Team using the contact information.

Technical Support Contacts:

- Phone: 262-746-3374
- Email: techsupport@goffscw.com
- Website: http://www.goffsenterprises.com

Step 2 — Orient and Prepare Idle Side Bracket Components

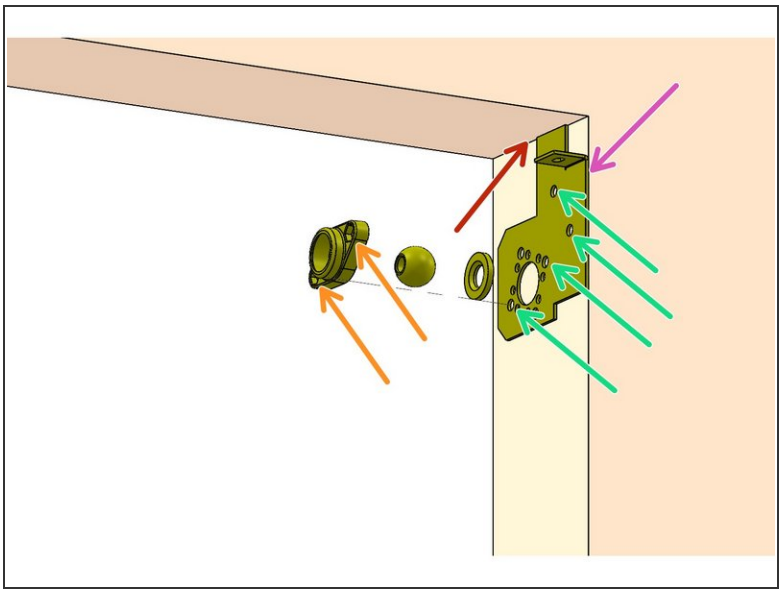

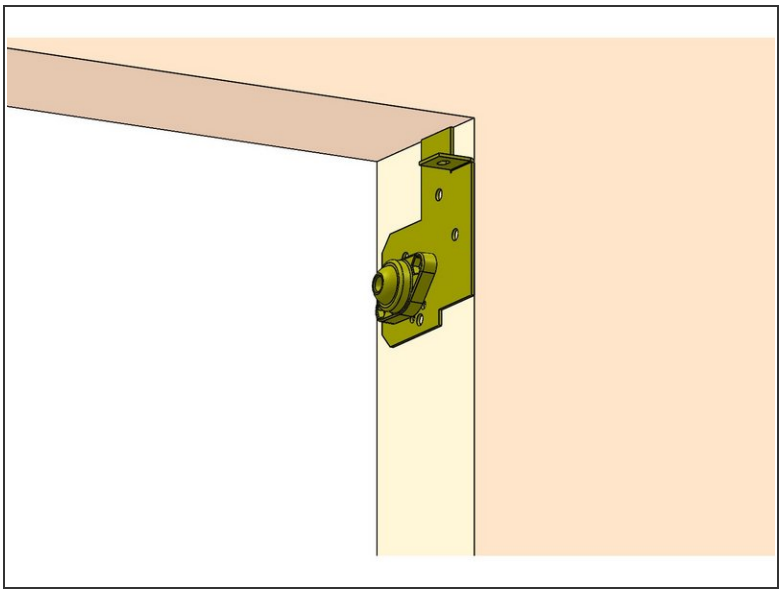

⚠ The Door Header must be level for the Door to operate properly.

- Check the door opening Header for level, and adjust the installation accordingly.
- Locate the Left Hand Header Mounting Bracket, and prepare to work on the upper Left of the Door Opening.

ⓘ Viewed from Back Surface.

- Align the top edge of the Bracket to the upper surface of the Door Opening.
- Align the back edge of the Bracket to the Back Edge of the Door Opening.
- Measure the Hole Centers on the Bearing Block to help determine which Mounting Holes will be used in the Bracket.
- Transfer Four Hole locations onto the Mounting Surface.

Step 3 — Mount Idle Side Bracket Components

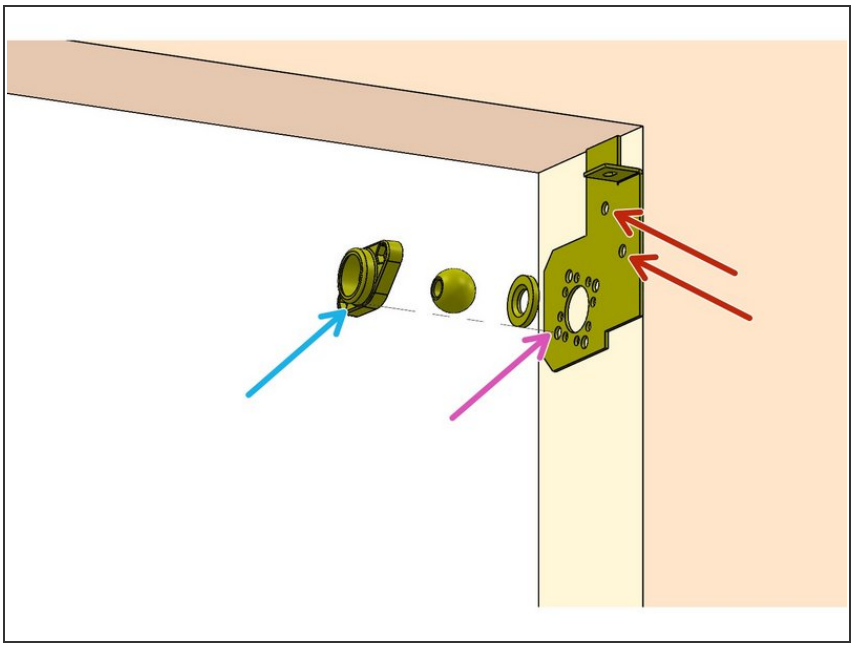

- Prepare the Mounting Surface for Wall Mounting Hardware.
- Insert your Wall Mounting Hardware through Idler Bearing assembly (3 pieces).
- Then through the Left Hand Header Mounting Bracket, into the Mounting Surface.

Step 4 — Mount Drive Side Bracket

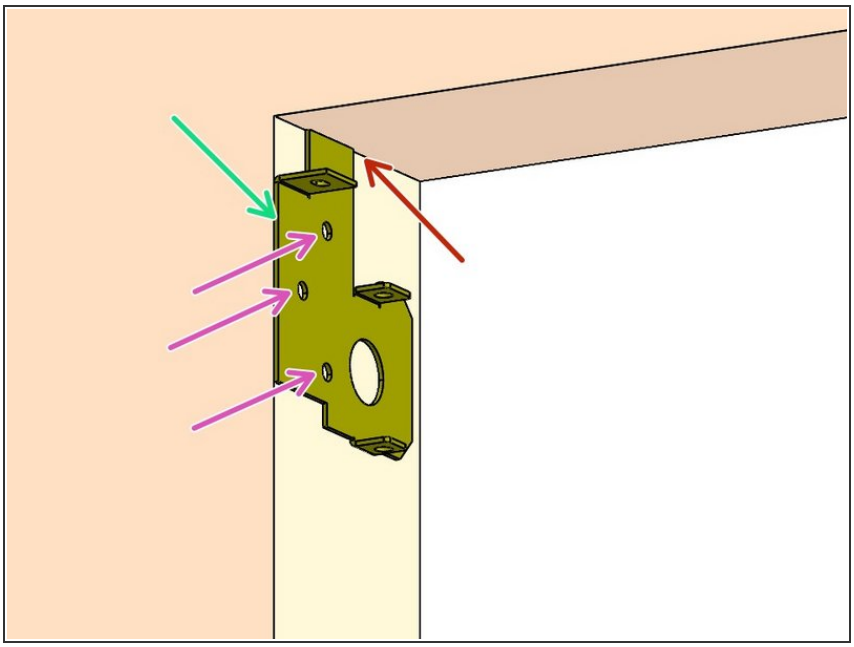

ⓘ Viewed from Back Surface.

⚠ The Door Header must be level for the Door to operate properly.

- Locate the Right Hand Header Mounting Bracket, and prepare to work on the upper Right of the Door Opening.
- Align the top edge of the Bracket to the upper surface of the Door Opening.
- Align the back edge of the Bracket to the Back Edge of the Door Opening.
- Transfer Three Hole locations onto the Mounting Surface.
- Prepare the Mounting Surface for Mounting Hardware.
- Mount the Header Mounting Bracket to the Mounting Surface.

Step 5 — Install Header Drive side

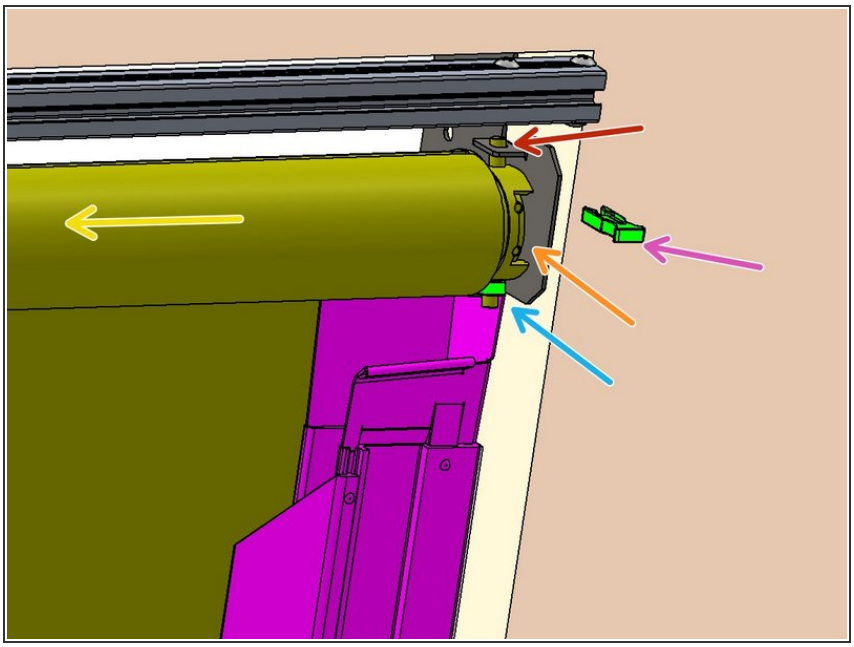

⚠ Use 2 people, and 2 ladders at minimum.

- Raise the Header Assembly
- Insert the Idler Shaft into the installed Idler Bearing Assembly at Upper Left.
- At the right side, orient the Switches toward the Front.
- Insert the Upper Motor Peg fully into upper hole of R.H. Header Mounting Bracket.
- Slip the plastic Ring onto Lower Motor Peg.
- Insert the Lower Motor Peg into the Lower hole on the Header Mounting Bracket.
- Insert the plastic Clip onto the Upper Motor Peg to fill space between the Bracket and Motor.

Step 6 — Orient and Prepare Vertical Tracks

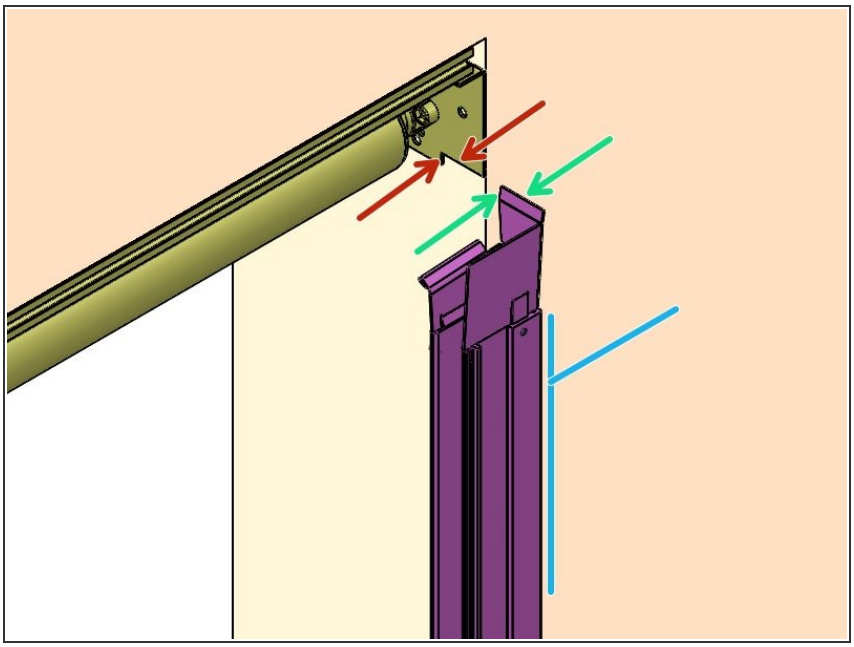

- ⓘ Use two people to make this process easier.
- Align the mating surfaces of the Track Transition Bracket -
  - -to the Header Mounting Bracket.
- Plumb Track Assembly (Front to Back).
- Transfer the Track Mounting Hole locations onto the Mounting Surface.
- Prepare the Hole locations for the Mounting Hardware.

Step 7 — Mount Vertical Tracks To Opening

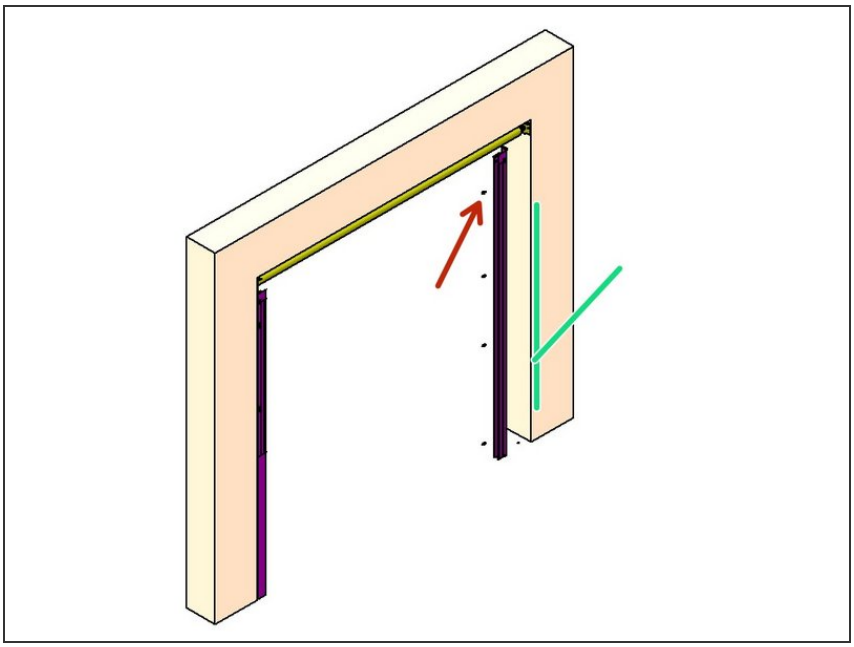

- Move the Track back into place.
- Install four Bolts through Holes in Tracks.
- Plumb Track.
- Fully tighten bolts.
- Repeat for the other Track Assembly.