# G2 5400 Projection Mount with Direct Drive Motor Installation

G2 5400 Projection Mount with Direct Drive Motor Installation 123489

Written By: Todd Lucas

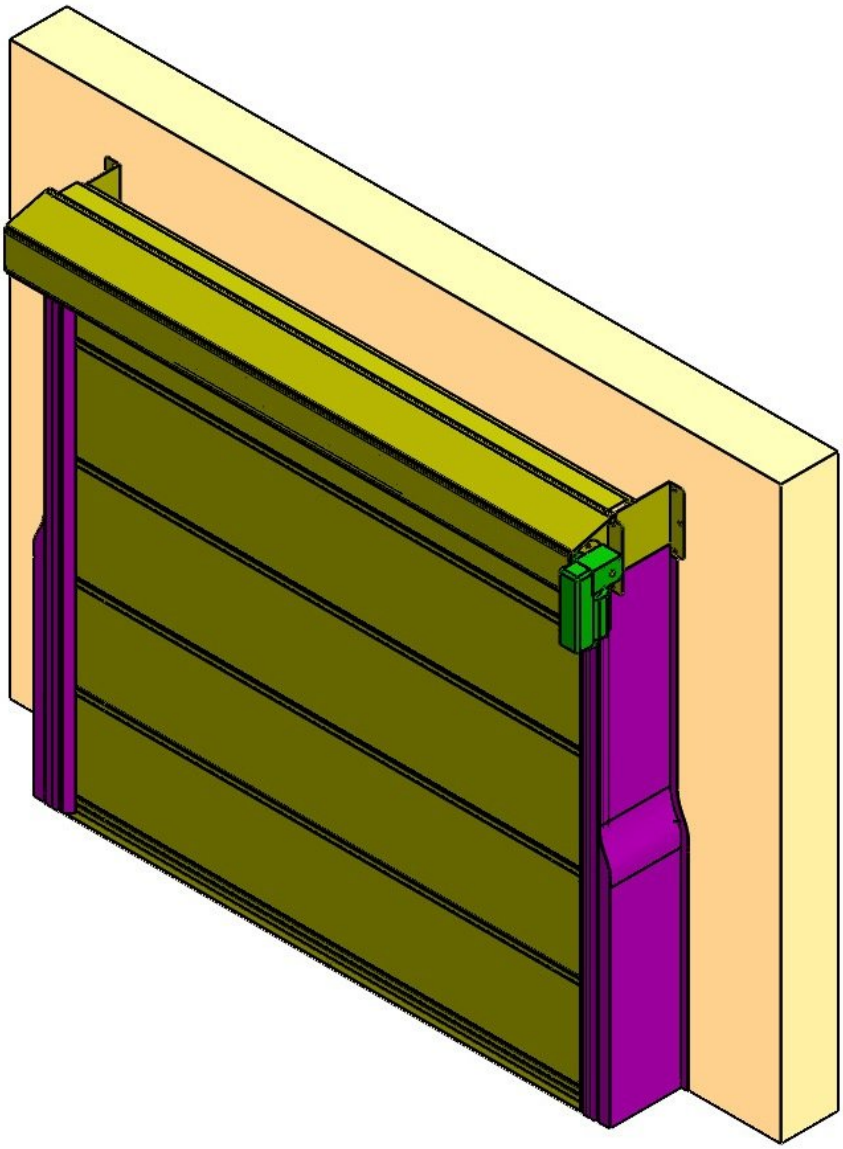

This document was generated on 2026-02-12 06:13:19 PM (MST).

## Step 1 — Review Product and Warnings

**ATTENTION**

Thank you for purchasing from Goff's Enterprises, Inc. To ensure maximum functionality and longevity of your product, please carefully review and understand this guide.

**SAFETY WARNING**

READ THIS MANUAL CAREFULLY. MOST INSTALLATION REQUIRES A LADDER AND TWO PEOPLE AT A MINIMUM. WEAR PROPER SAFETY GEAR AND CLOTHING. OBSERVE WARNINGS AND PRACTICE CAUTION WHEN INSTALLING, OPERATING, OR MAINTAING YOUR PRODUCT. FAILURE TO DO SO COULD RESULT IN SERIOUS INJURY.

**ADDITIONAL SUPPORT**

*For additional assistance after reviewing this instruction, please reach out to our Technical Support Team using the contact information.*

- **Technical Support Contacts:**
- Phone: 262-746-3374
- Email: techsupport@goffscw.com
- Website: http://www.goffsenterprises.com

## Step 2 — Measure Opening and Mark the Centerline

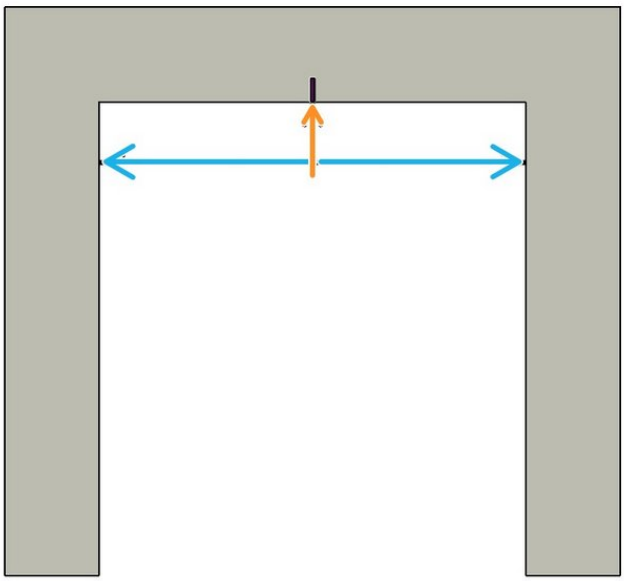

- Measure the Opening Width near the top of the Opening.
- Divide that overall width measurement in half to find the Centerline location.
- Clearly Mark the Centerline location.



© 2026

## Step 3 — Measure Door Header Width

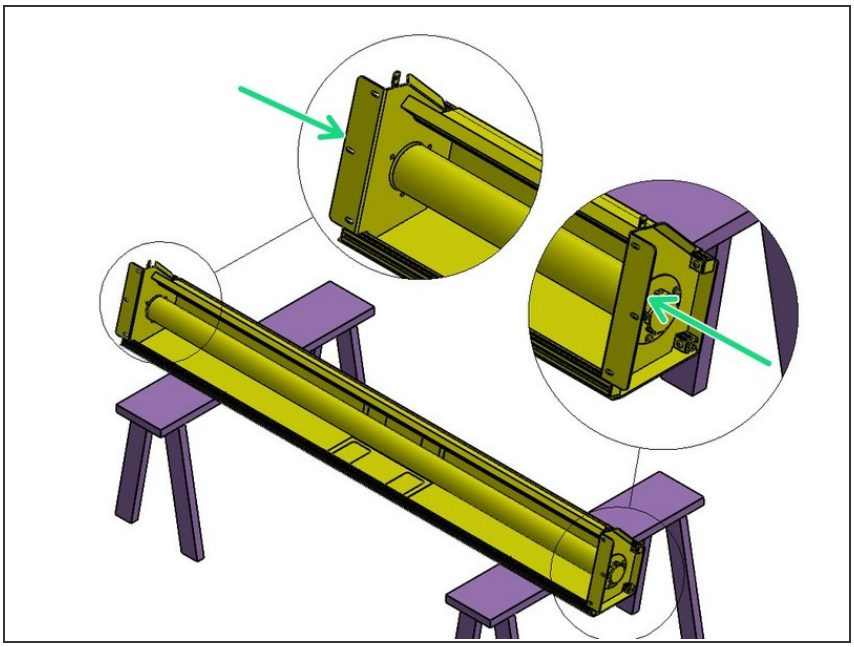

ⓘ The Header Measuring Process is identical for all Door Models. The Door Model you are installing may be different from the Model shown.

- Place the Door roll Header Assembly across a safe and level work surface, and rotate the roll assembly frame so that the Header Bracket Mounting flanges are facing upward.
- Measure the total width of the whole roll assembly from outermost edge of one Header Bracket's Mounting flange to the outermost edge of the opposite side.
- Divide that number by 2. This number is 1/2 of the Header Width, and is used to determine the Header location on the Left and Right Sides of the opening.



© 2026 

## Step 4 — Mark the Header Width on the Opening

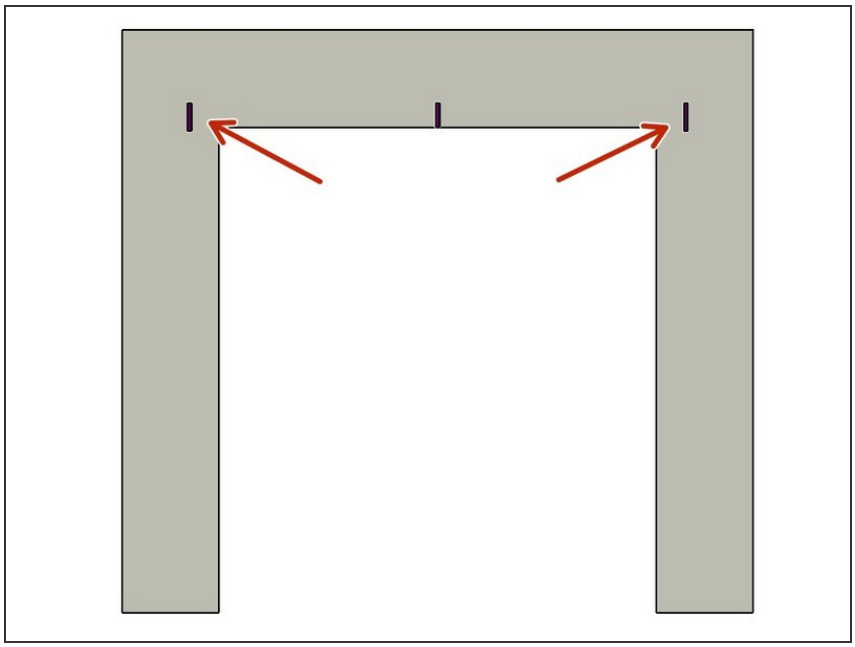

- Mark this dimension on each side of the Opening Center mark.

## Step 5 — Measure Track Height

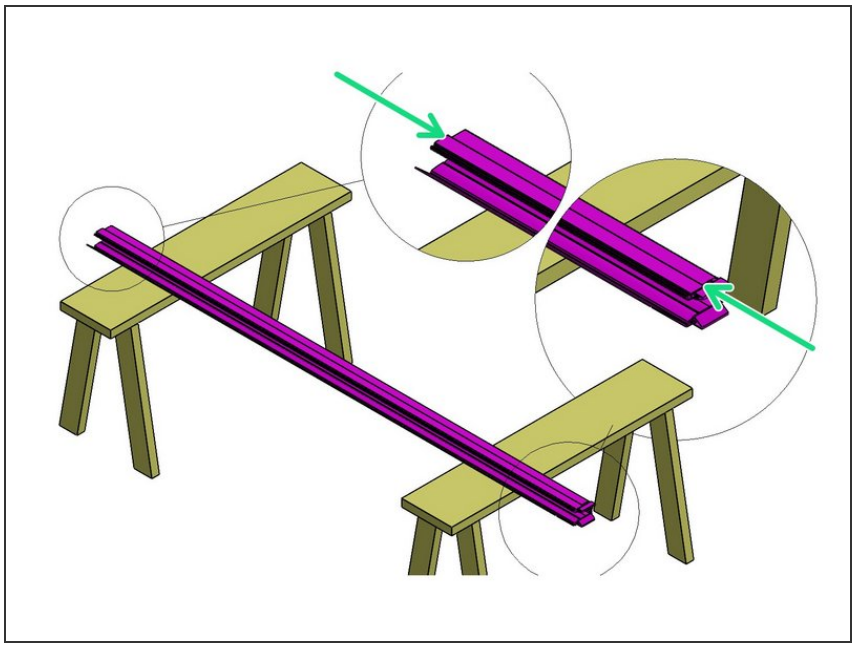

- Lay one of the Vertical Track Assemblies on your work surface.
- Measure the Length of the Aluminum Track only.
- Add 1/4" to the Track dimension.
- This is the Height dimension needed to mark the location of the Bottom edge of the Header Mounting Brackets.

## Step 6 — Mark the Track Height on the Opening

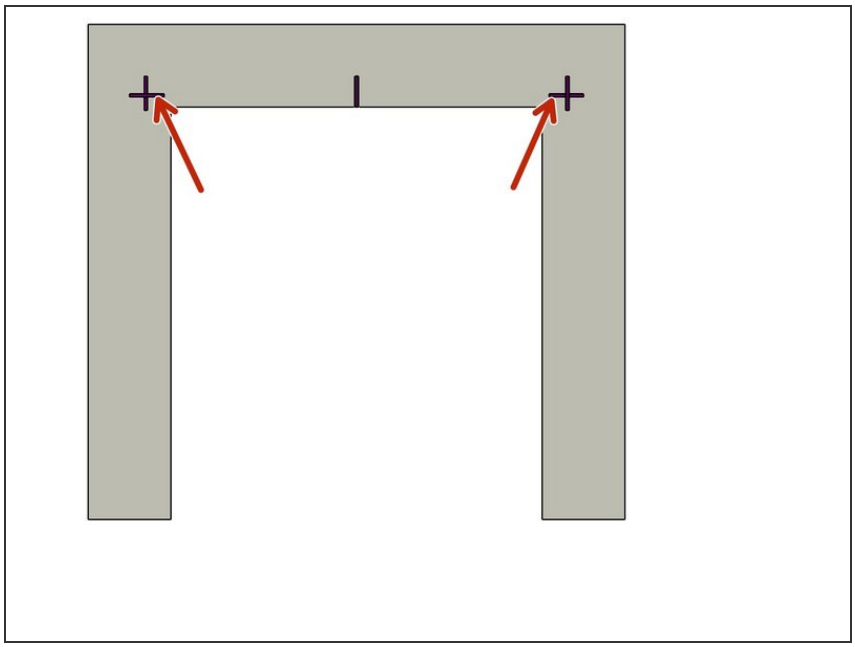

- Add a Horizontal line on each side of the Opening that intersects the previously drawn Vertical line.

## Step 7 — Orient Projection Brackets

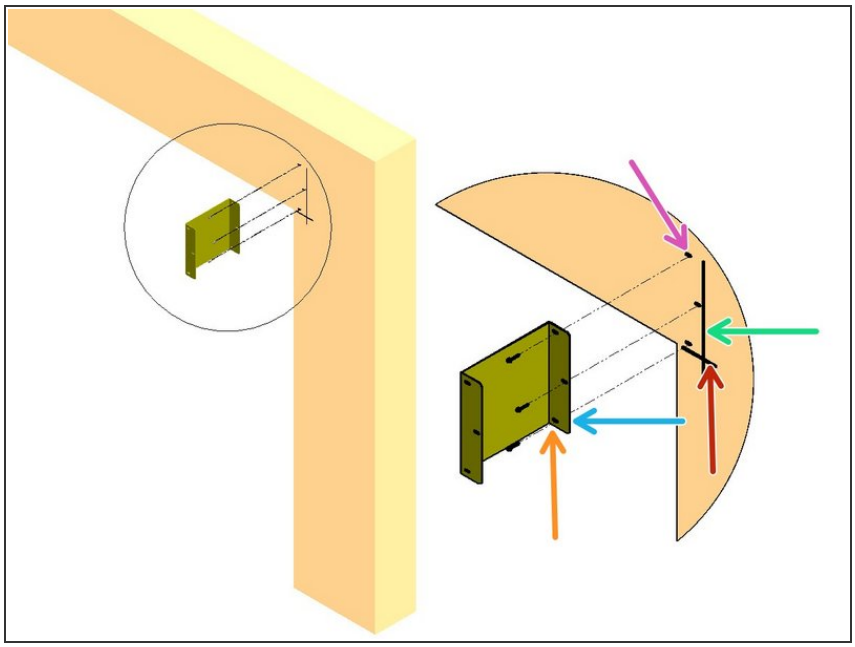

- Orient the slotted end of the Header Mounting Projection Bracket against the Mounting Surface.
- Orient the flange outward.
- Align the Bottom surface of the Header Mounting Bracket with the Horizontal line on the Mounting Surface.
- Align the Outer edge of the Header Mounting Bracket with the Vertical line on the Mounting Surface.
- Trace the slotted mounting slots onto the Mounting Surface.


© 2026

## Step 8 — Fasten Projection Brackets

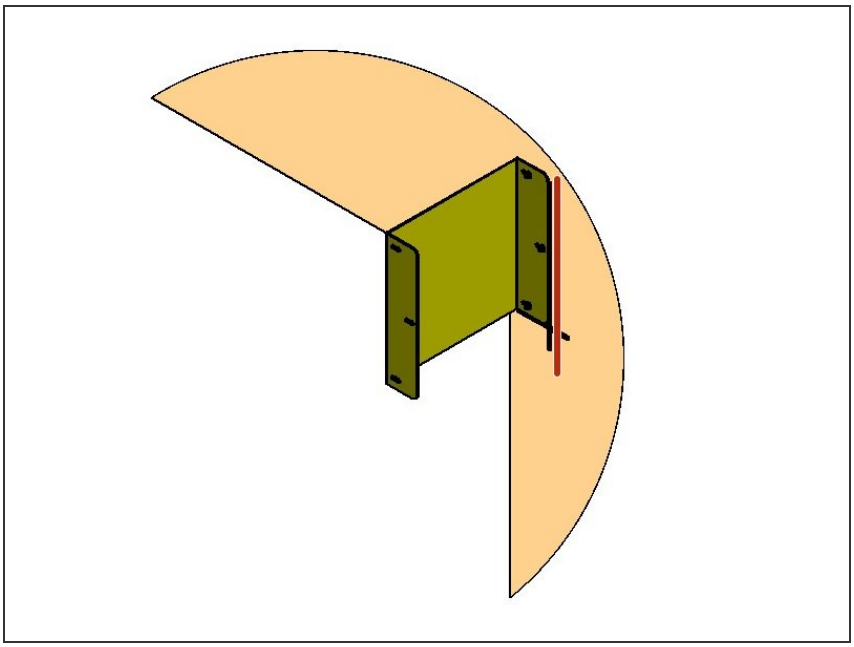

- Loosely fasten Bracket to the Mounting Surface with appropriate hardware.
- Plumb the Bracket.
- Tighten Hardware securely.
- Repeat for the other Header Mounting Bracket.

## Step 9 — Raise and Attach Roll Header Assembly

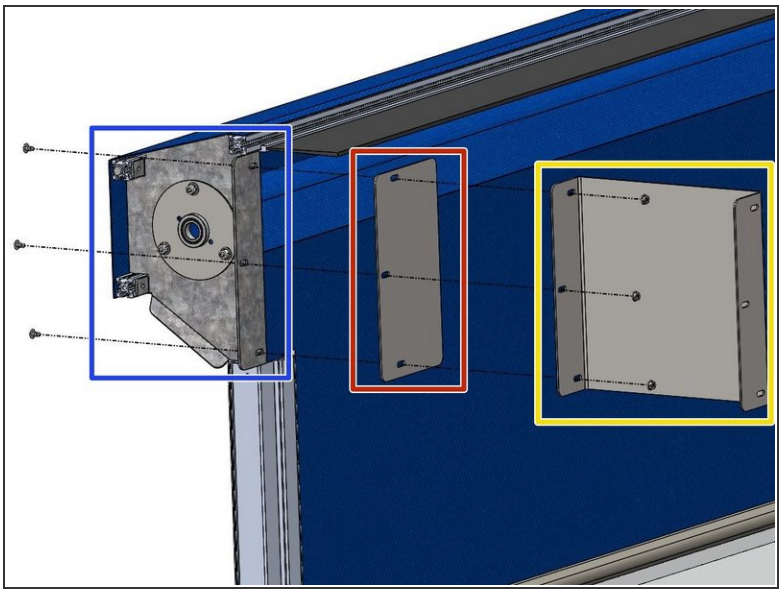

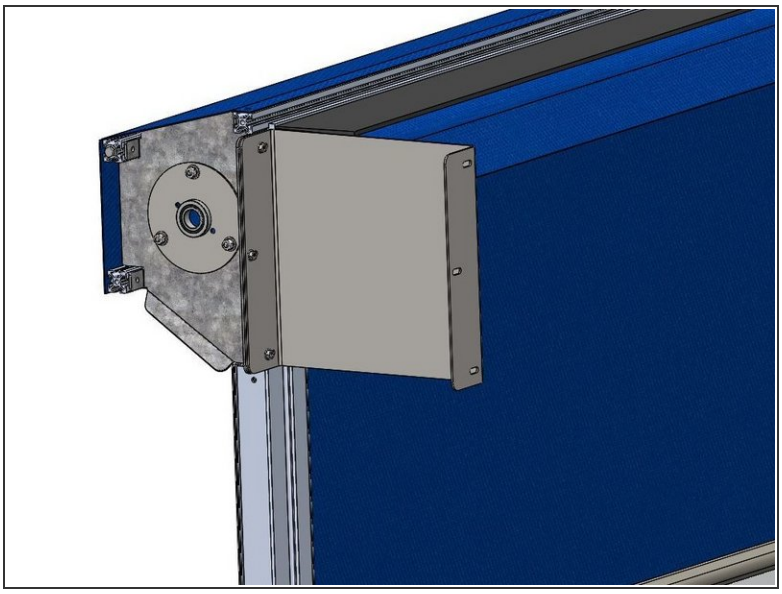

- After Installing your Header Projection Mount Brackets to the Wall:
- Sandwich the G2 Header Backer Bracket between:
  - The Header Projection Mount Bracket (On the Wall).
  - And the Door Header Assembly Side Plate.
- Fasten the (3) Brackets together using the provided Screws, Washers, and Serrated Flange Nuts.



© 2026 

## Step 10 — **Optional** - Mount Track Extensions

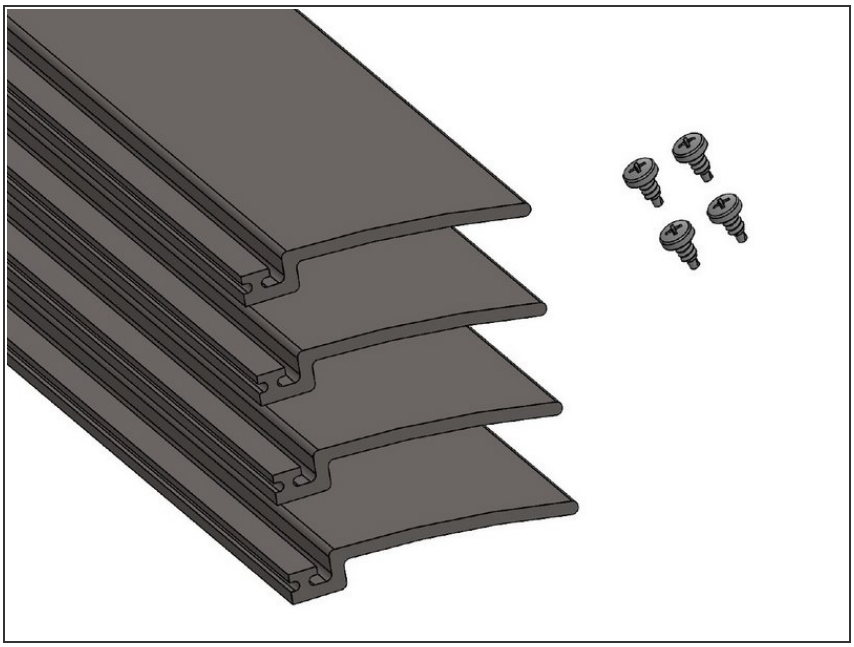

⚠ If you would like to mount the optional Track Extensions, please refer to the supplemental Track Extension installation instruction before proceeding. If not, proceed to the next step.

## Step 11 — Overview Notes - G2 Track Installation

⚠ The Track mounts to the Outside of the Tab of the Header Mounting Bracket.

⚠ It is important to insert the Carriage Bolt from the Inside of the Header Bracket, and to install the Washer and Hex Nut on the Outside of the Track.

⚠ The Track must be plumb before securing it to the Mounting Surface.



© 2026 

## Step 12 — Prepare and Mount the Track Assemblies

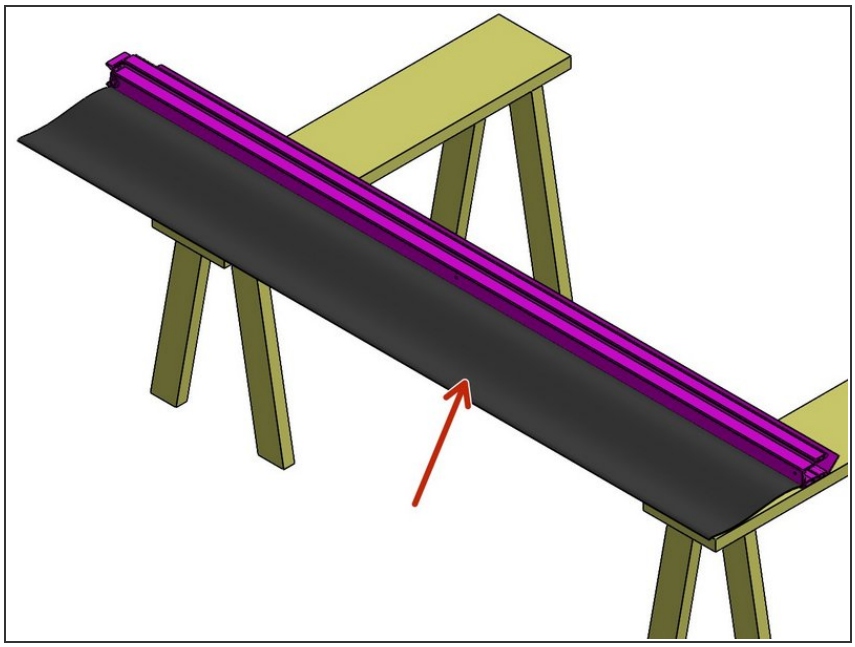

ⓘ The Track Assemblies are marked for orientation as Left side, and Right side.

- Lay a Track Assembly on a work surface, and un-roll the Side Seal material.

## Step 13 — Assemble the Projection Brackets

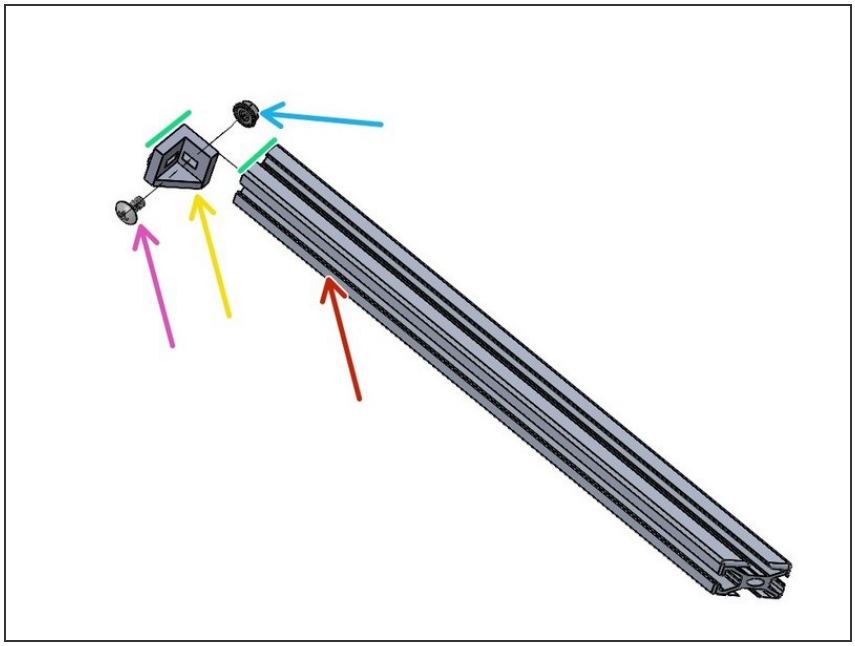

- Insert the 1/4" Screw
- through the Gusset
- Thread the Nut on the first Screw thread
- Slide the nut into the shortest side of the extruded Bracket.
- Flush the Gusset and Bracket, then tighten the pack securely.

## Step 14 — Assemble Projection Brackets to Track

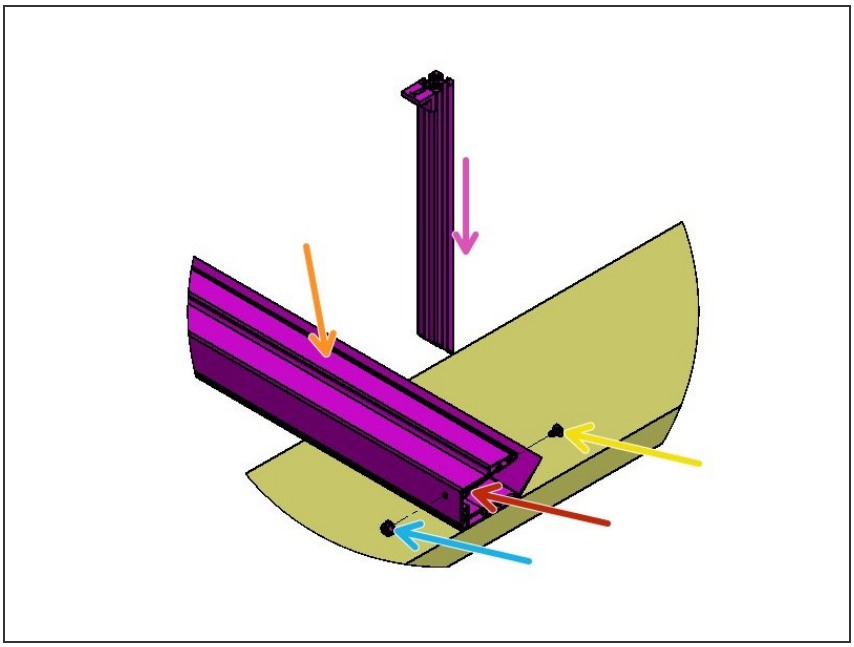

- Lay the Track Face down. The Track Back has two different widths from the Front face.
- Insert a 1/4" Screw
  - through a hole from the Inside of the Track.
  - ⓘ Tracks are Pre Drilled for Projection Brackets at mid-Height and near the Bottom.
- Thread a Nut on, from the outside of the Track, about one thread.
- Slide the Long side of the Projection Bracket under the Nut.
- ⓘ Hold the Edge of the Bracket about .4" from the Front Edge of the Track, Square the parts up, then tighten the pack snugly. This will be adjusted later to Plumb the Track.
- Repeat for the other Bracket into the other hole in the Track.


© 2026

## Step 15 — Projection Mount Track Installation

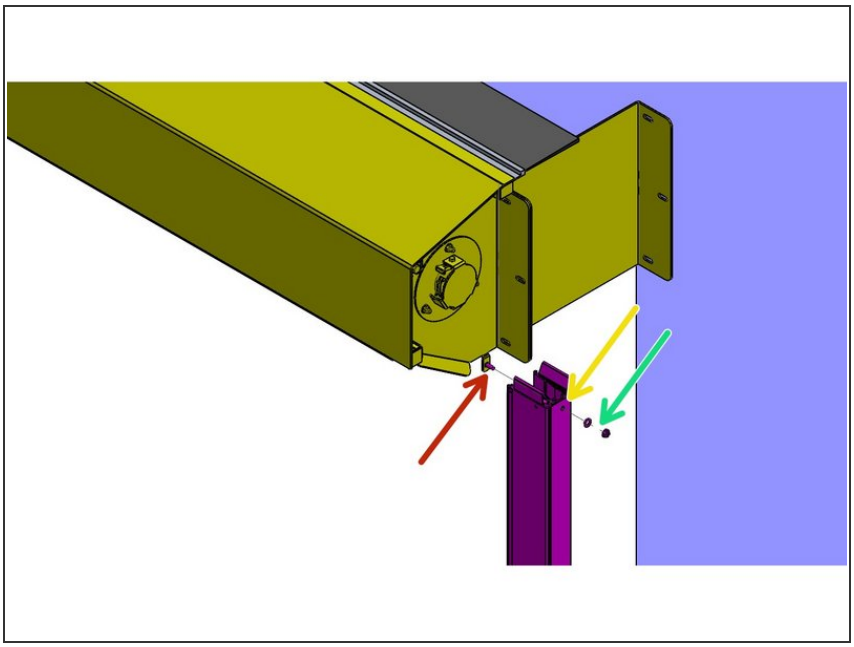

- The Track assembly mounts to the outside of the tab of the Header Assembly Mounting Bracket.
- Install the Track onto the Bolt on the Outside of the Header Bracket Tab
- Slide the Washer onto the Bolt from the outside of the Track, and snug the Hex Nut on the Bolt. (This Track Mount hardware will be removed in later steps.)


© 2026

## Step 16 — Install Track Brackets on Mounting Surface

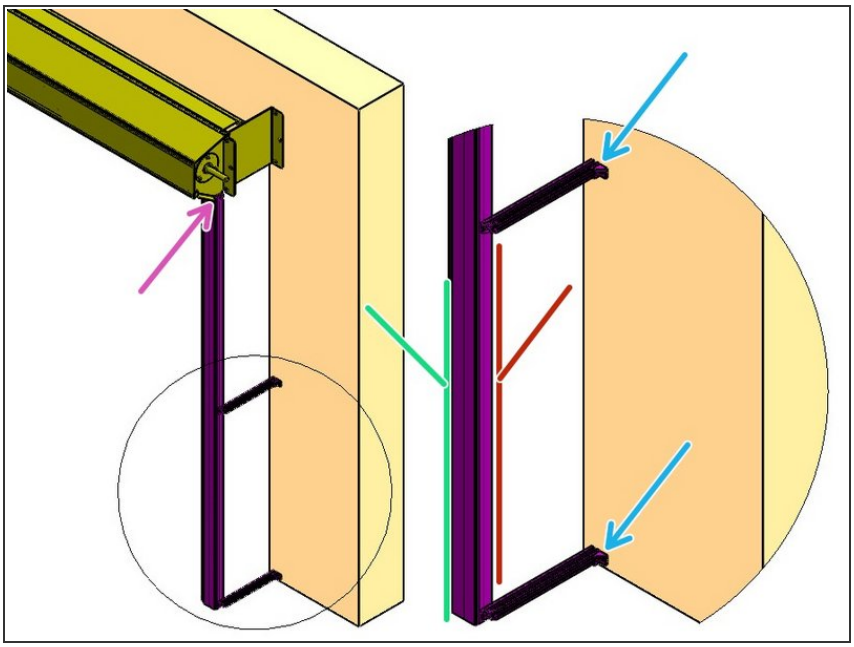

- Plumb the Track Left to Right.
- Transfer the Mounting Hole locations onto the Mounting Surface.
- Remove the Track, and prepare these locations for Hardware appropriate to the Building Material.
- Reinstall, snugly, the Track Mount Hardware. (It will be removed again in a later step.)
- With the track “hanging” in this position, Plumb the Track Left to Right.
- Secure the Track Brackets to the Mounting Surface.
- Plumb the Track Front to Back by loosening the Track Bracket Screws.
- Tighten all of the Hardware Securely.

## Step 17 — Install the Side Seal Material

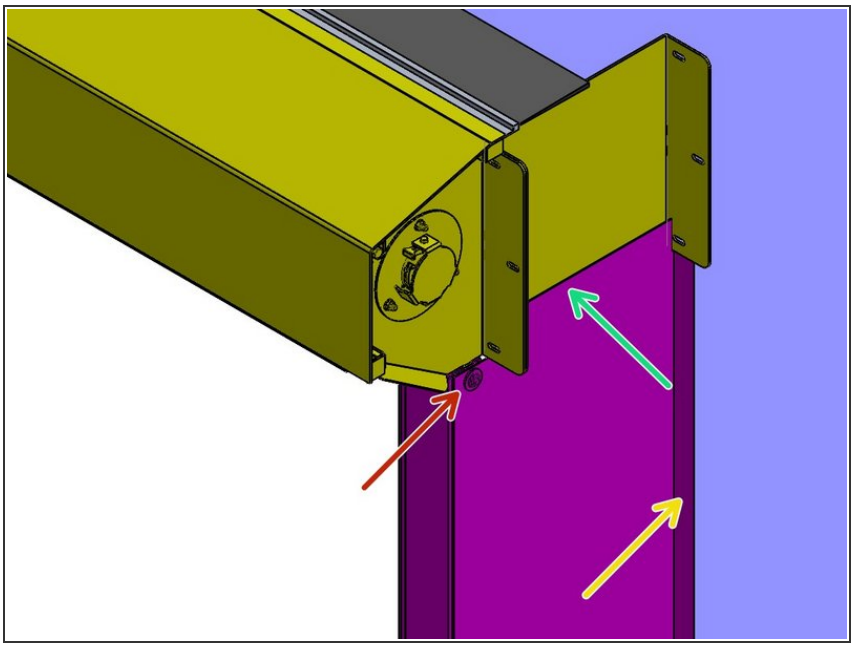

- Remove the Track Mounting Hardware.
- Re-Install the Hardware with the Side Seal Grommet under the Washer and Nut, then tighten Securely.
- Affix the Hook and loop Material to the Header Bracket along the Top Edge of the Side Seal Material.
- Fold and Secure the Side Seal Material to the Mounting Surface



© 2026