Distance Bubble Machine

Build our classic Bubble Machine with the addition of a Distance Sensor to shoot bubbles at anyone who gets too close!

Written By: Pete Prodoehl

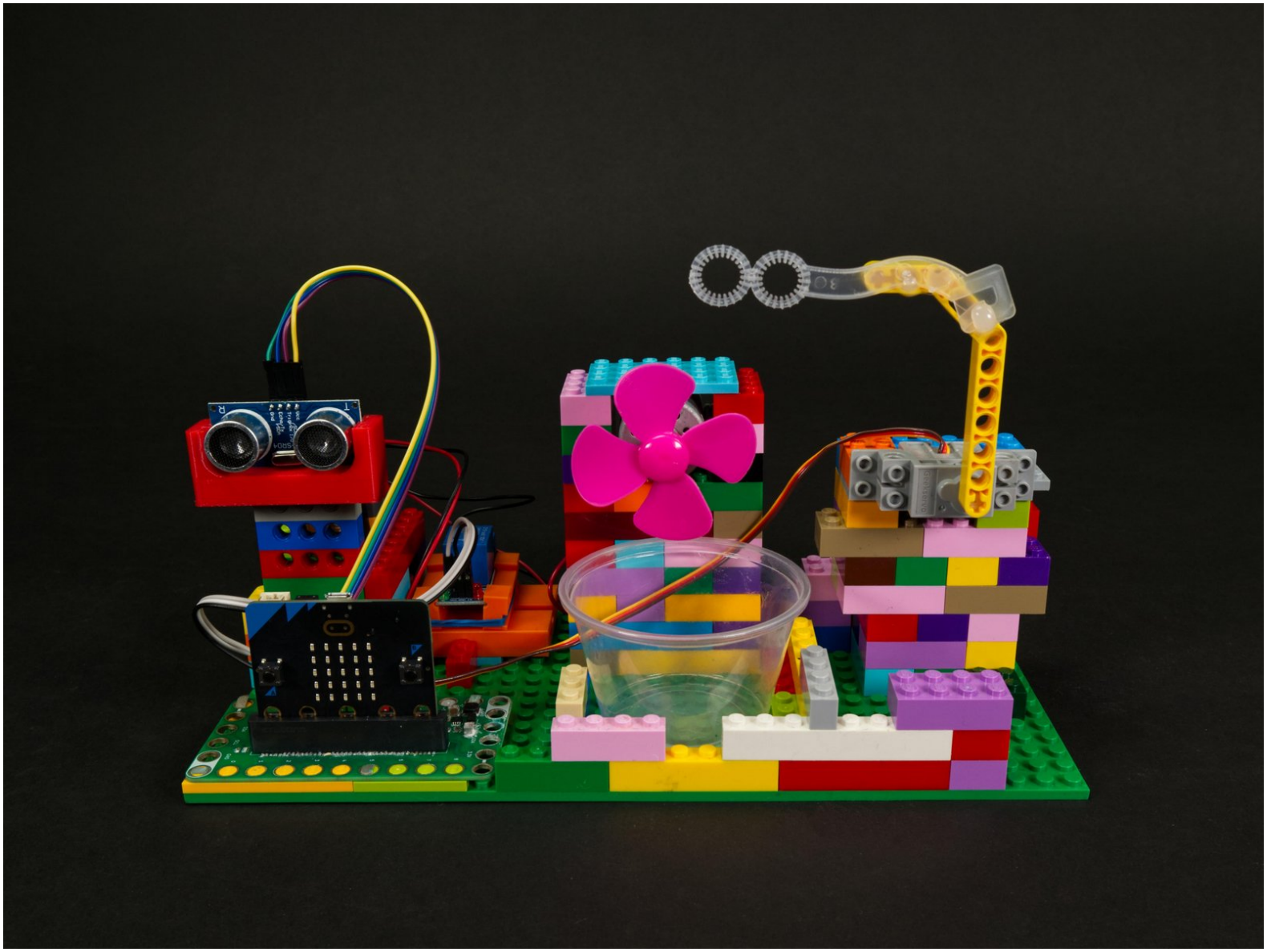

This document was generated on 2024-12-07 12:44:39 AM (MST).

INTRODUCTION

Build our classic Bubble Machine with the addition of a Distance Sensor to shoot bubbles at anyone who gets too close!

This guide is a follow-up to our Bubble Machine guide and adds a Distance Sensor to trigger the bubbles in place of a push button.

TOOLS:

- Computer (1)

PARTS:

- Crazy Circuits Bit Board (1)
  V2
- Distance Sensor (1)
- Relay Module (1)

© 2024

Step 1 — Build Bubble Machine

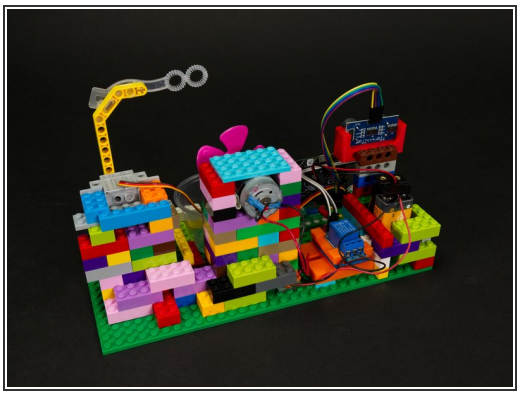
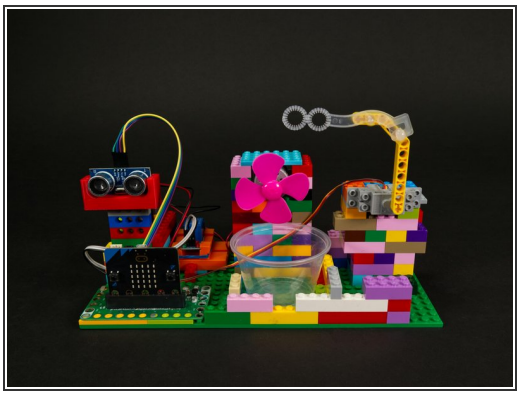

- The Distance Bubble Machine is based on our original Bubble Machine but uses a Distance Sensor in place of a push button.
- Take a look at the Bubble Machine guide to get the gist of building the LEGO portion of the project.

Step 2 — Add Servo

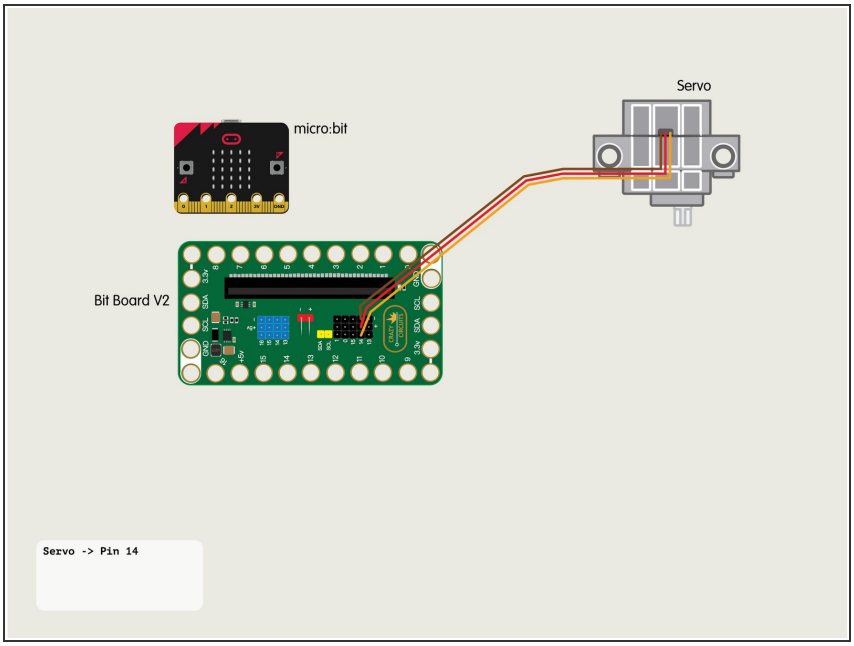

⚠ For all of the connections to the Bit Board we will be using the set of black pins for this project instead of the blue pins.

- Plug the servo connector into the row for **Pin 14**. The orange wire should go to the pin closest to the 15 on the board, the red wire goes into the **+5v** row, and the brown wire goes into the **-** row, which is ground.

Step 3 — Add Distance Sensor

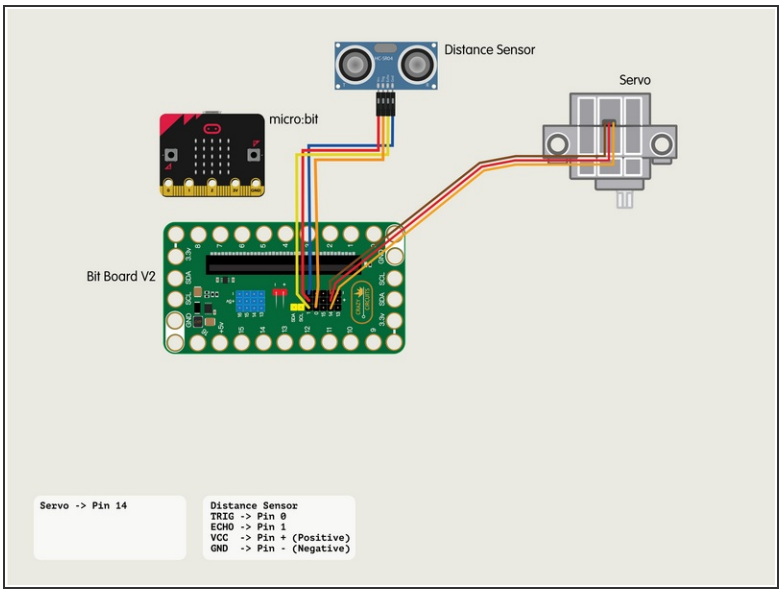

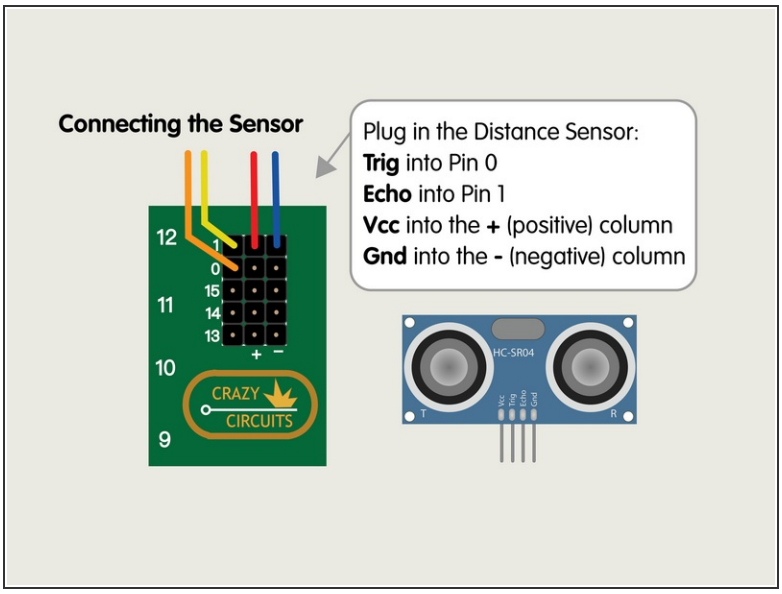

- Plug in the Distance Sensor and connect the **Trig** pin to **Pin 0**, the **Echo** to **Pin 1**, and then **Vcc** to a pin in the **+** (positive) column and **Gnd** to a pin in the - (negative) column.

Step 4 — Add Relay Module

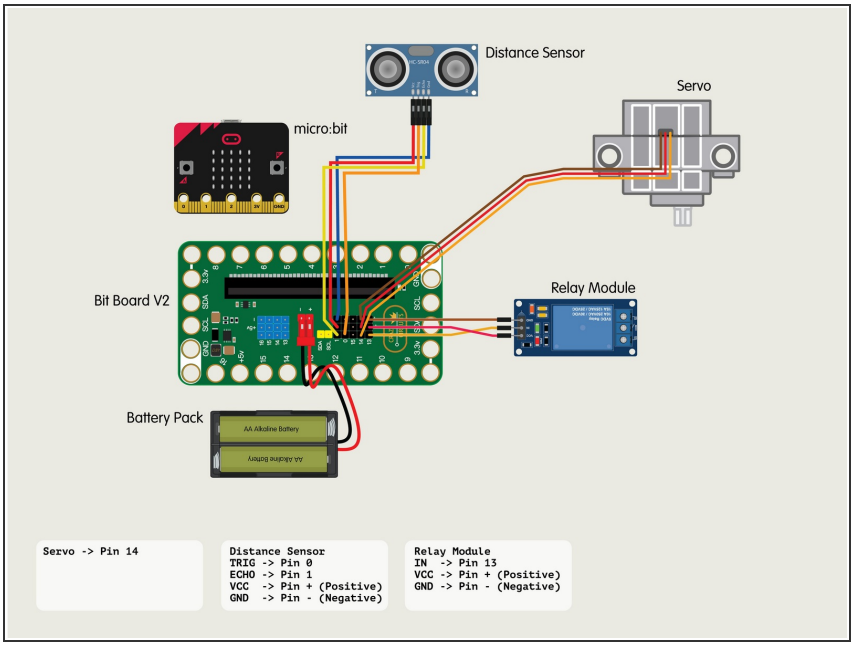

- If you've never uses a Relay Module you may want to [check out our guide] first.
- Connect the **IN** from the Relay Module to **Pin 13**.
- Connect **VCC** from the Relay Module to a **+** (positive) pin.
- Connect **GND** from the Relay Module to a **-** (negative or "ground") pin.

Step 5 — Add the Motor and Battery

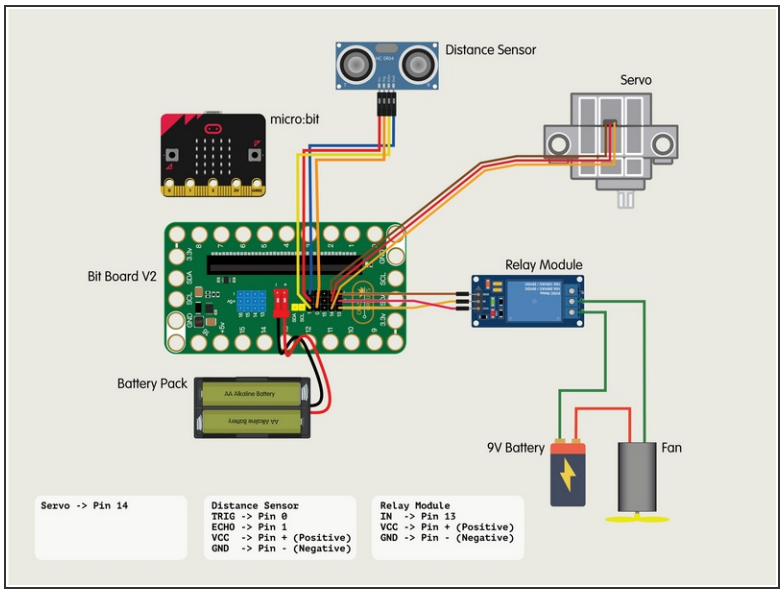

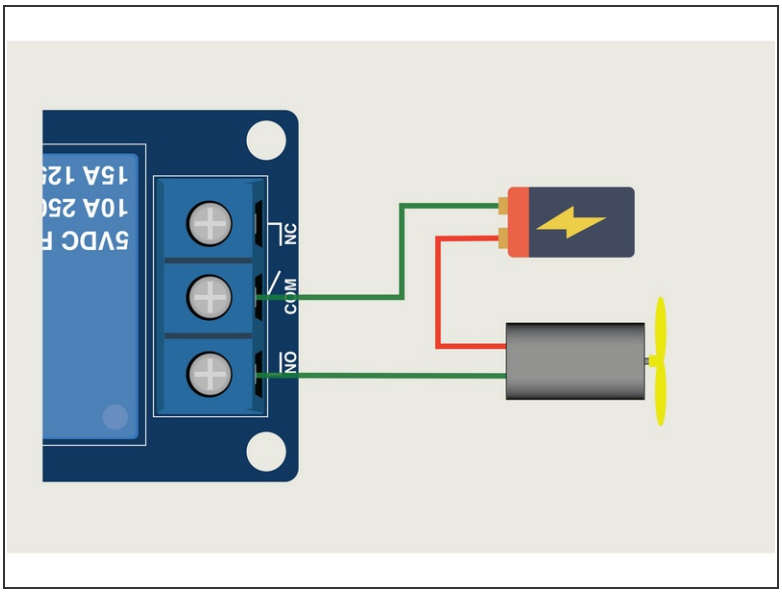

- Our Motor with a Fan (along with the 9 Volt Battery) will connect to the Relay to use it as a "Smart Switch" that can be controlled by the Bit Board.
- The Relay Module will have three connections on the screw terminal side.
  - **COM** is Common.
  - **NO** is Normally Open.
  - **NC** is for Normally Closed.
- NO (Normally Open) is how most switches work. The circuit path is *open* (or not completed) when the switch is **off**. Turning the switch **on** *closes* the circuit path.
- Follow the diagram to connect the Motor & Battery to the Relay inline to act as a **NO** switch.

Step 6 — Load the Code

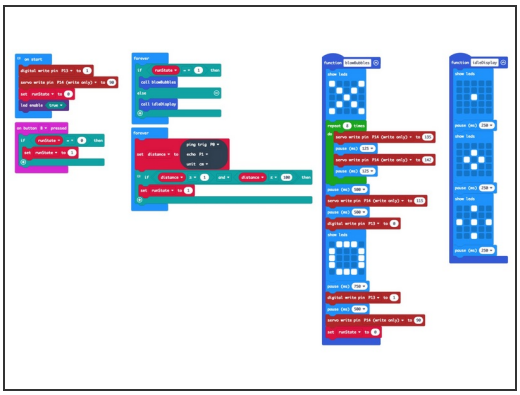

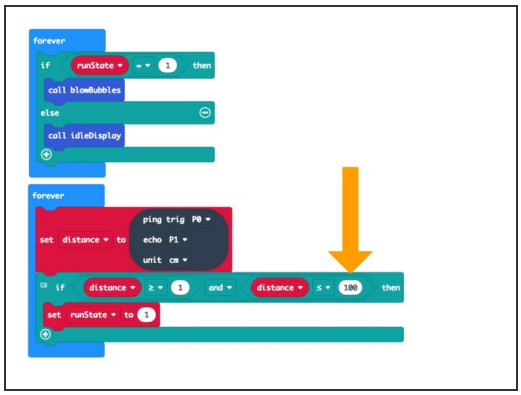

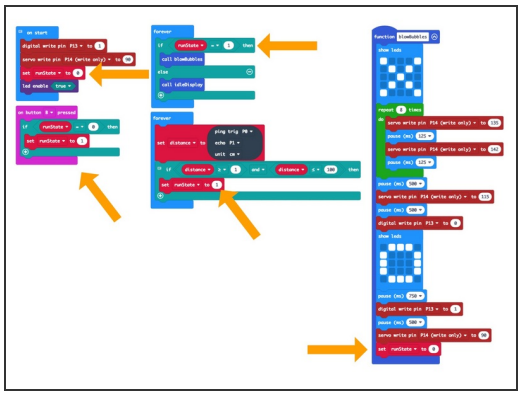

⚠ If you've never used a micro:bit before you'll want to check out this guide: [Bit Board V1 Setup and Use]

ⓘ Note that while the setup guide is for V1 most of the information is general and will apply to V2 as well.

- We're going to load the following code for our **Distance Bubble Machine** program: https://makecode.microbit.org/_Ap22Hxbam...
- If you want to adjust the distance from the sensor that will trigger it, just change the **100** to some other value. (Any value lower than 200 should work.)
  - Note that we look for a low value equal to or greater than **1**. We found that occasionally the sensor returned **0**, so the **1** prevents false triggers.
- Finally we control the bubble blasting with a runState variable. This allows us to have the bubble blowing triggered by the sensor, but also when we press the **B** button, in case we want to stand behind the Bubble Machine and blast some bubbles at an unsuspecting victim.

Step 7 — Test it Out!

- Once you've got the code loaded and bubbles in place you can test it out!
  - (Although you may want to do your first tests **without** bubbles!)
- When you (or an object) get close enough to the Distance Sensor it will trigger the bubble blowing process.
  - Note: For this video we set the distance in the code to 30cm. It is normally at 100cm.
- Did you get bubbled? Great! It's working!

Step 8 — Take it Further

- Now that you've built a Distance Bubble Machine you're ready to do so much more!
- You can make changes to this project, or check out some of our other fun ideas.
- Keep On Bubbling!