Campfire Badge

Written By: Pete Prodoehl

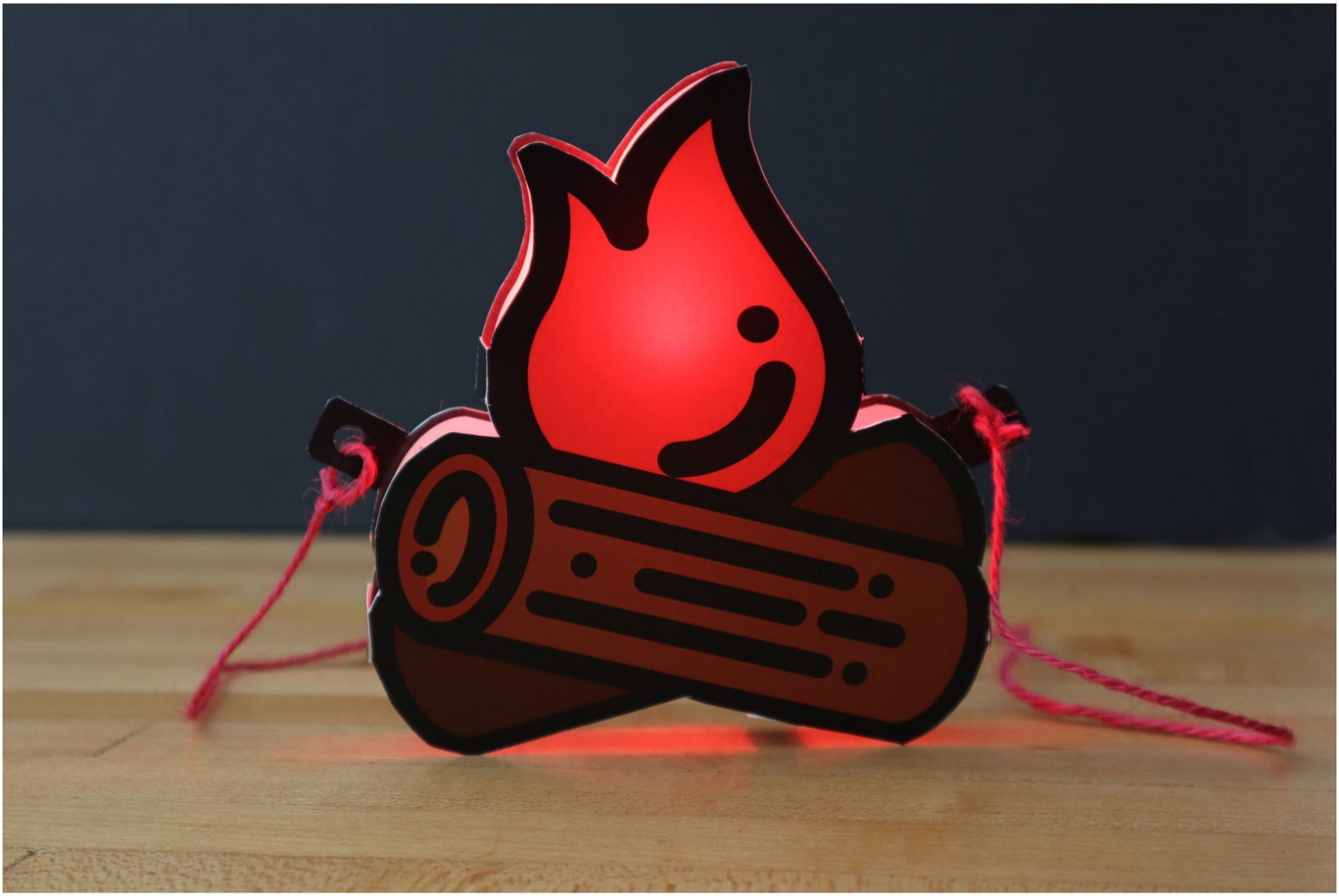

INTRODUCTION

Make a light-up Campfire Badge with our Maker Tape and grab some marshmallows!

TOOLS:

- Scissors (1)
- X-ACTO Knife (1)

PARTS:

- Paper Circuits Kit (1)

Step 1 — Cut it Out

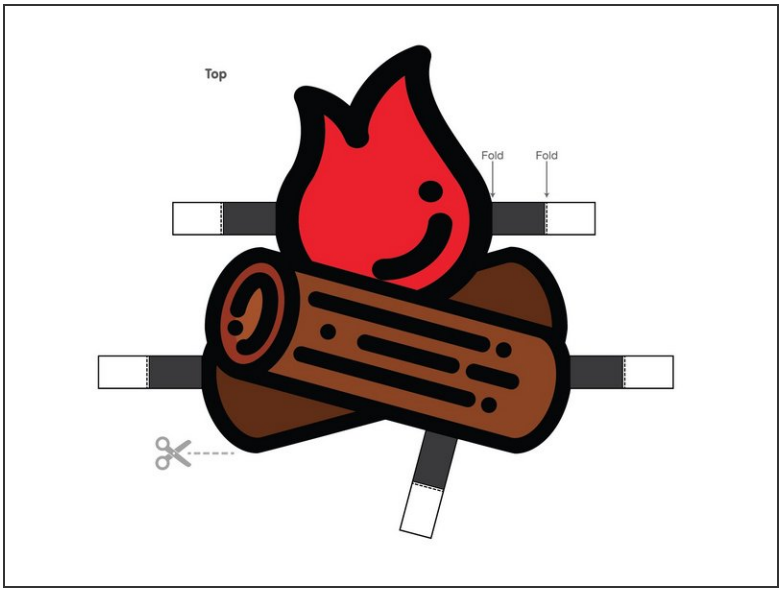

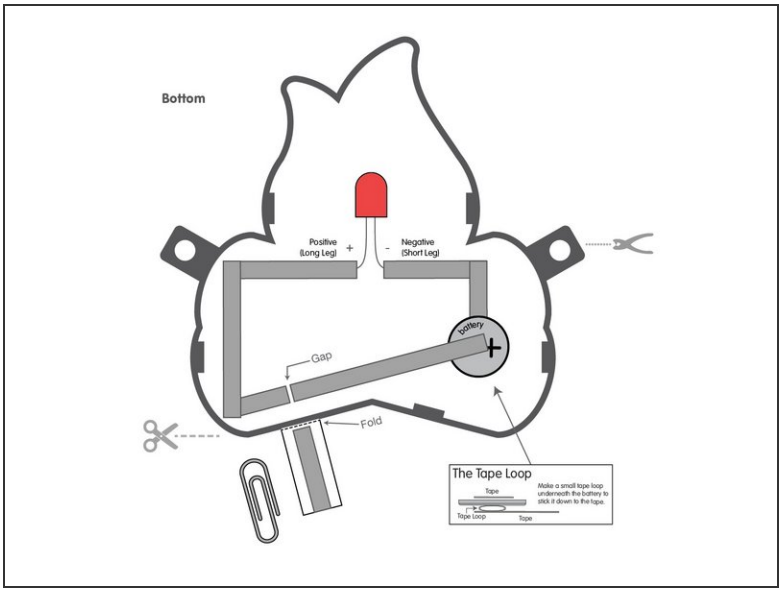

- Print the top and bottom of the campfire on two different pieces of paper. (We recommend a heavier paper stock.)

ⓘ We have a full-color version and a black & white version. Choose which one you want to use. (The black & white version is fun to color!)

- Cut out the top and bottom pieces, and use a hole punch to make holes in the tab for a string to so you can wear your badge.

Step 2 — Build Your Circuit

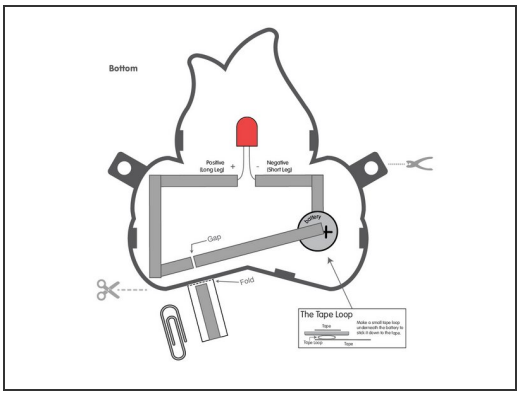

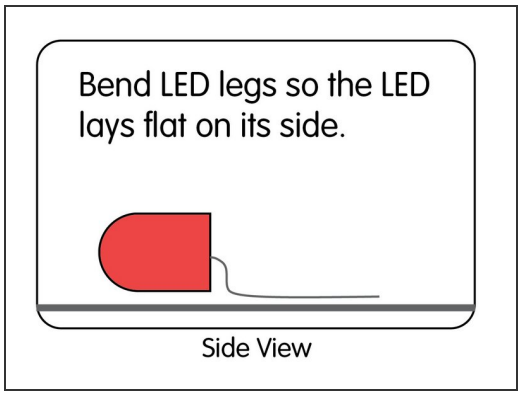

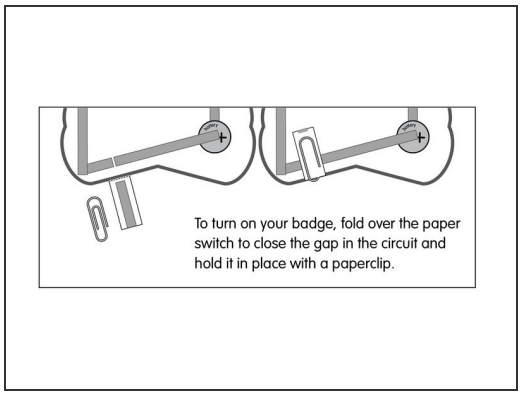

- Using Maker Tape, a battery, and a red LED build your circuit on the bottom part of the campfire.

ⓘ See the template for instructions on bending the LED legs so they point the correct way.

- Add a piece of Maker Tape to act as a switch that can fold over the gap in the circuit to complete it.

Use a paperclip as a "switch" to keep your circuit turned on while you wear it.

Step 3 — Put it Together

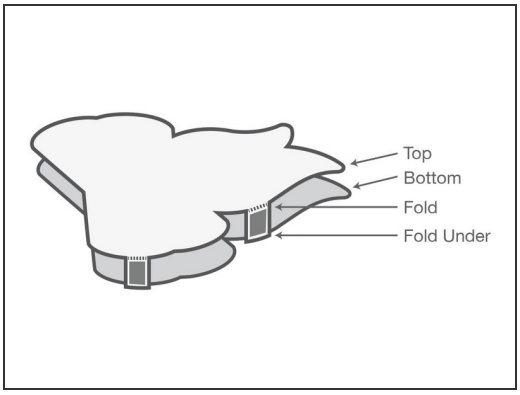

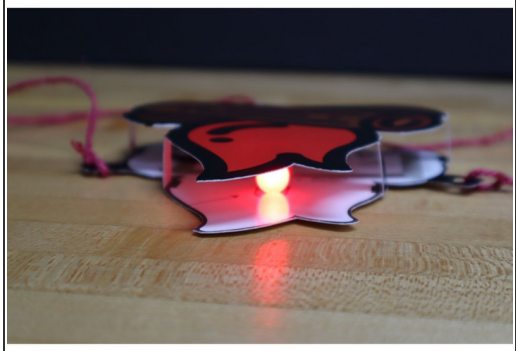

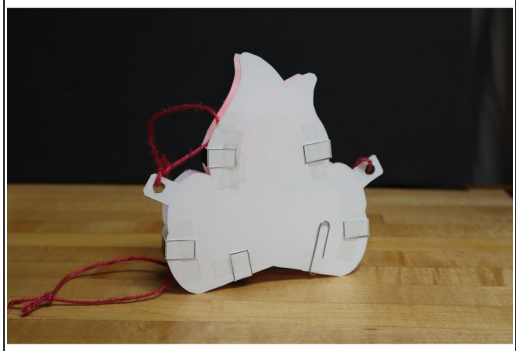

- Bend the tabbed pieces on the top part of the campfire so they can go under/behind the bottom part of the campfire.

ⓘ The "legs" of the top part of the campfire let it sit above the bottom part of the campfire so our LED has some room to glow.

- Attach the tab legs to the back/bottom of the campfire with tape or glue.

Step 4 — Wear Your Badge







- Add some string to the holes on the side tabs.
- Enjoy your Campfire Badge!